HULL

SERVICE PRODUCTS

Description	Part Number	Page
BRP HEAVY DUTY CLEANER	293 110 001	10, 12
LOCTITE 5900	293 800 066	8–9, 11, 13

Spark Series

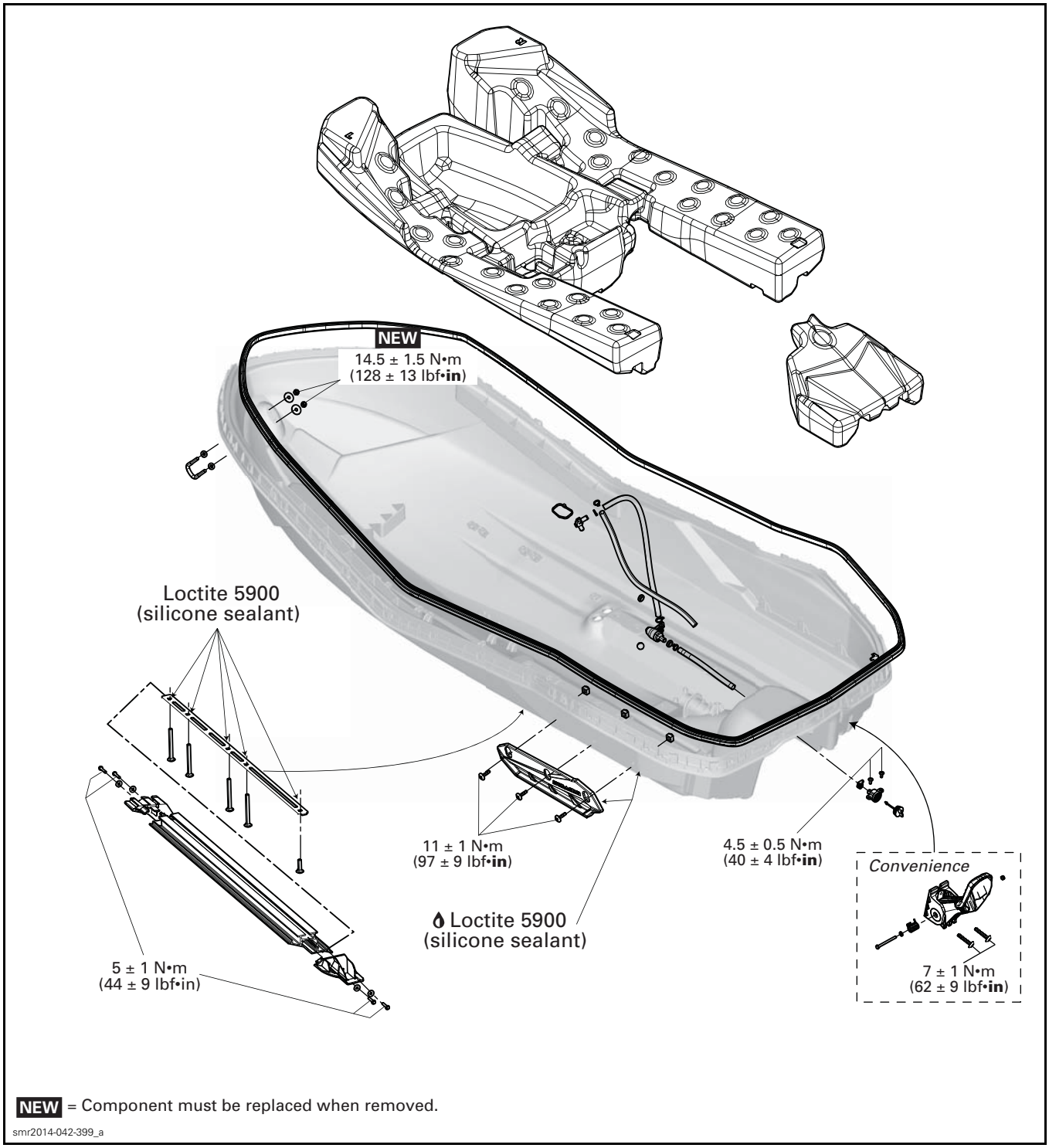

NEW = Component must be replaced when removed.

smr2014-042-399_a

3UP

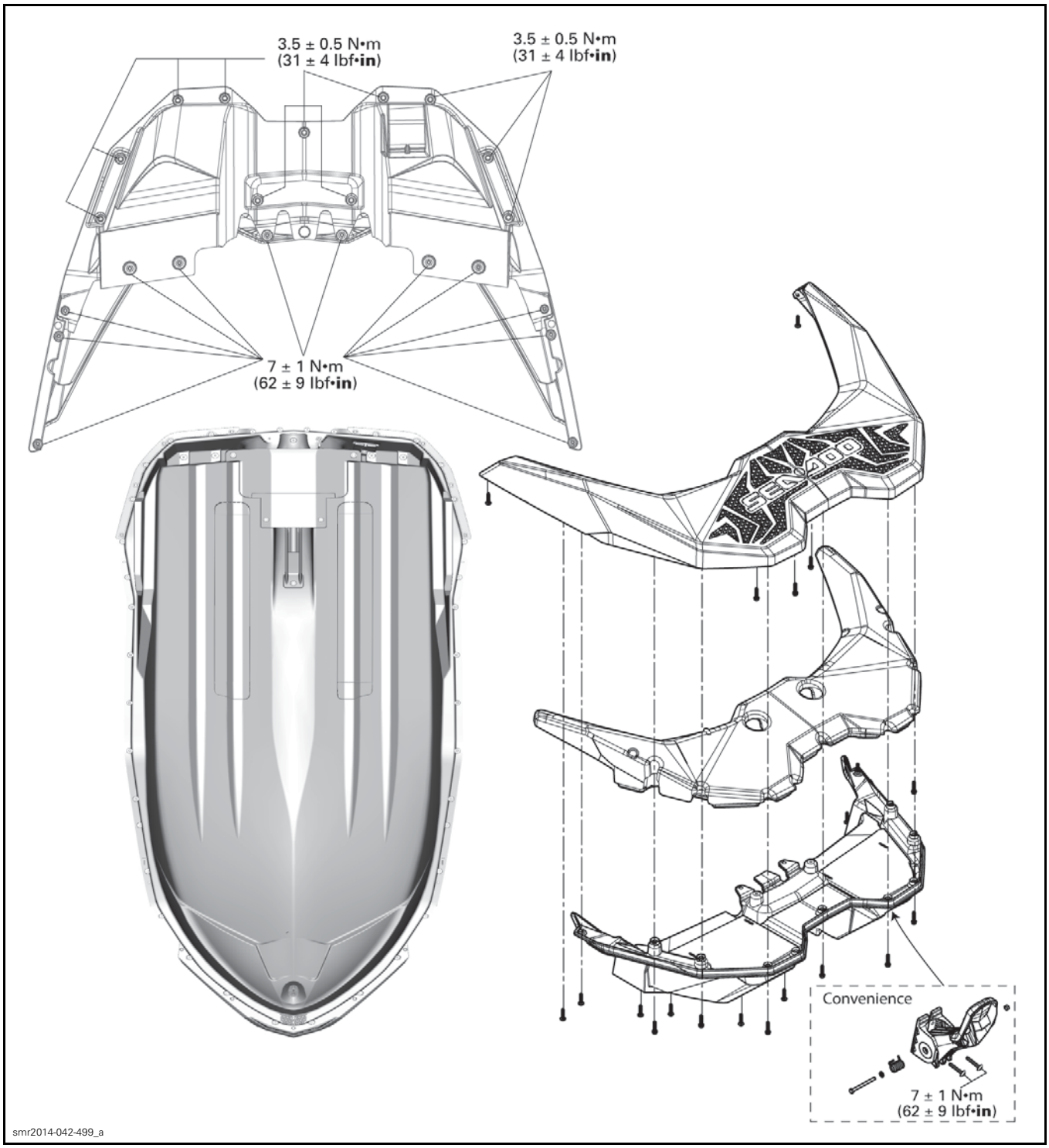
3.5 ± 0.5 N•m
(31 ± 4 lbf•in)
3.5 ± 0.5 N•m
(31 ± 4 lbf•in)
7 ± 1 N•m
(62 ± 9 lbf•in)
Convenience
7 ± 1 N•m
(62 ± 9 lbf•in)
smr2014-042-499_a

Spark Series

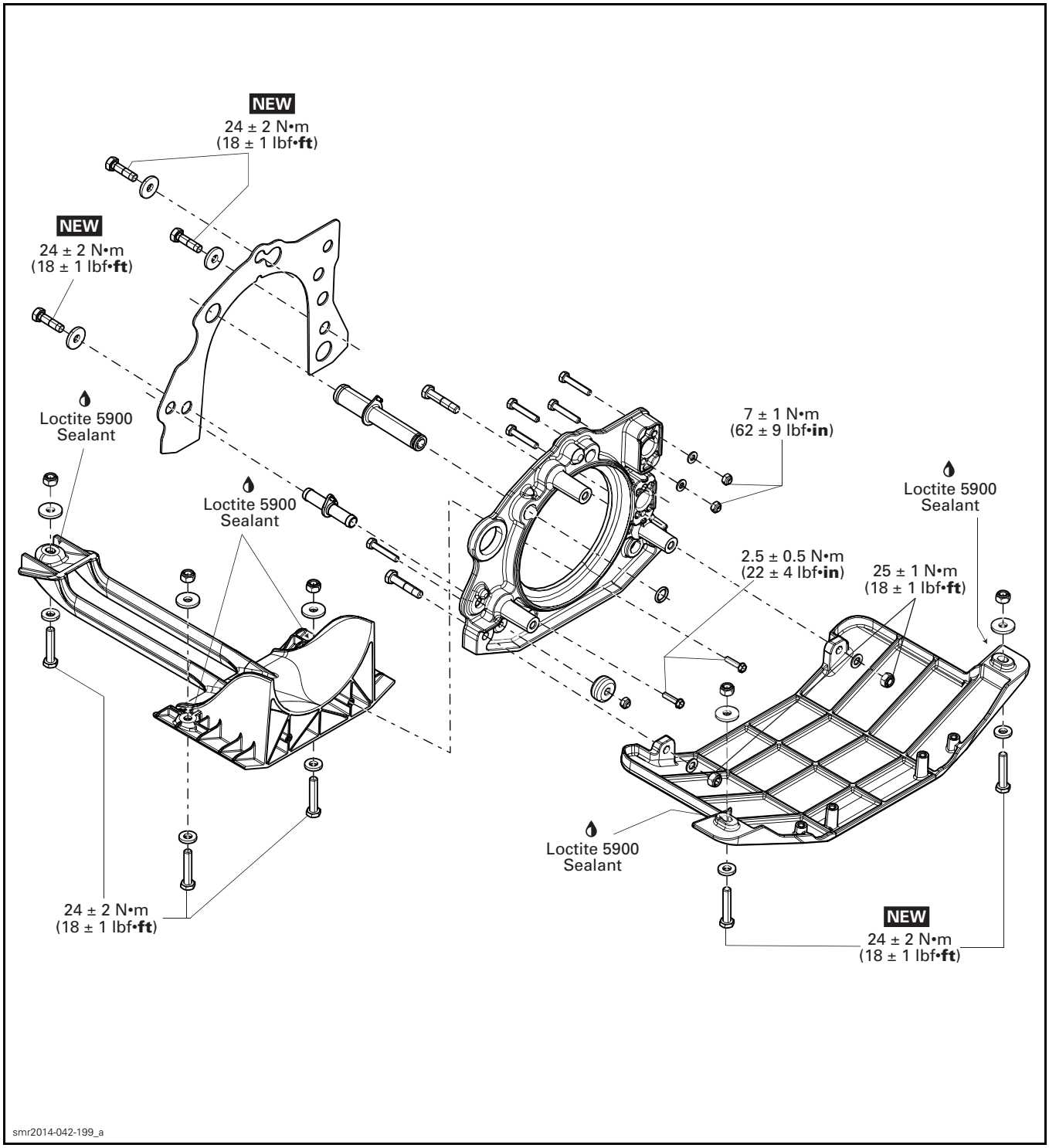

PROCEDURES

HULL

Hull Replacement

The hull is sold separately and may be replaced if damage is deemed too severe.

NOTICE **The following list is not exhaustive and represents the general order in which to proceed with hull replacement.**

Remove the following components:

1. All body parts. Refer to *BODY*.
2. Battery.
3. Jet pump. Refer to *JET PUMP*.
4. Drive shaft. Refer to *DRIVE SHAFT*.
5. Air intake silencer. *AIR INTAKE SYSTEM*.
6. Engine. Refer to *ENGINE REMOVAL AND INSTALLATION*.
7. Remaining cooling system components. Refer to *COOLING SYTEM*.
8. Remaining exhaust system components. Refer to *EXHAUST SYSTEM*.
9. Remaining fuel system components. Refer to *FUEL SYSTEM*.
10. Electrical harness.
11. Steering cable. Refer to *STEERING AND OTAS SYSTEMS*
12. Remaining hull components.

Hull Thread Repair

In the event that proper torque on screws threaded into the hull cannot be applied, a brass insert can be installed.

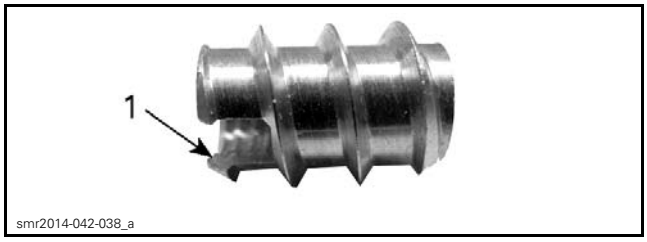

BRASS INSERT
1. Cut end

The new insert is threaded and will not accept the old self-tapping screw. A replacement M6 X 20 screw must be used with the brass insert.

PARTS TO BE INSTALLED	
PART	PART NUMBER
Brass insert	293 450 345
M6 X 20 screw	250 000 628

Installation Instructions

Use a N drill bit only.

NOTICE **Do not use 8mm drill bit.**

1. Drill a minimum of 15 mm (.6 in) deep.

NOTICE **Do not drill deeper than 20 mm (.8 in).**

2. Install brass insert, cut end first, into hull using M6 X 20 screw and a spacer tube or nut.
3. Remove screw and spacer tube or nut.

TIGHTENING TORQUE	
M6 X 20 screw	3.5 N•m ± 0.5 N•m (31 lbf•**in** ± 4 lbf•**in**)

HULL SEAL

Do not reuse the hull seal if removed.

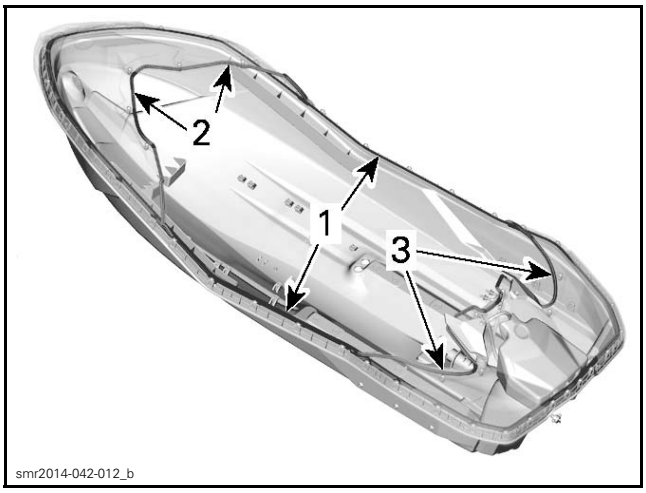

SEALS
1. Hull seal
2. Front body seal
3. Rear body seal

Hull Seal Removal

For all body removal procedures, refer to *BODY* section.

1. Remove central body.
2. Remove front bumper.
3. Remove front body.

2UP models.

4. Remove rear bumpers.

3UP models.

Remove 3UP boarding platform. Refer to *3UP BOARDING PLATFORM* in this section.

All models.

5. Remove rear body.
6. Pull on hull seal to remove it.

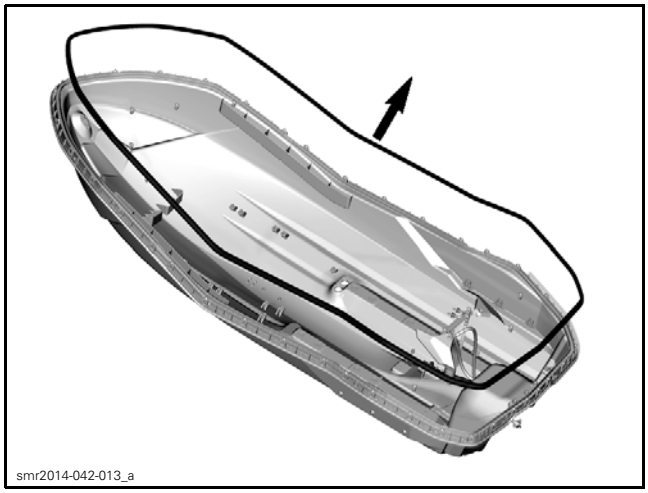

HULL SEAL

Hull Seal Installation

The hull seal is held in place by a perimeter groove in the hull.

1. Properly position the hull seal above the hull.
2. Firmly press the hull seal into perimeter groove in hull.
3. Install all removed parts.

3UP BOARDING PLATFORM

3Up Boarding Platform Removal

1. Loosen the following screws.

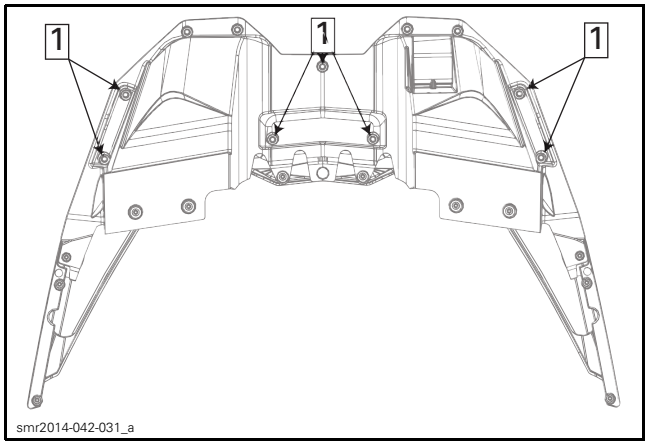

3UP BOARDING PLATFORM - VIEW FROM UNDERNEATH
1. M6.31 X 30 hexagonal shoulder screws

2. Remove the following screws.

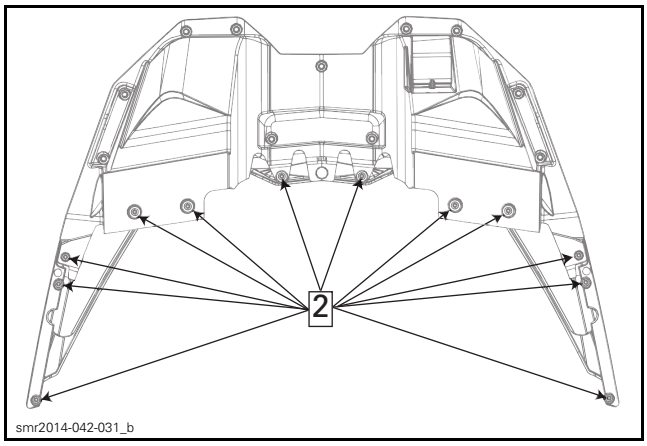

3UP BOARDING PLATFORM - VIEW FROM UNDERNEATH
2. M6.81 X 30 torx shoulder screws

3. Wiggle the 3UP boarding platform off the stern of the watercraft.

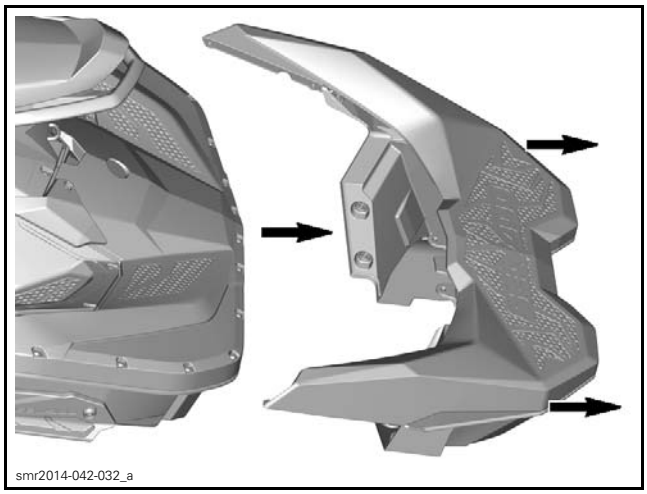

3Up Boarding Platform Installation

When installing 3UP boarding platform, ensure splash tabs are properly positioned on hull.

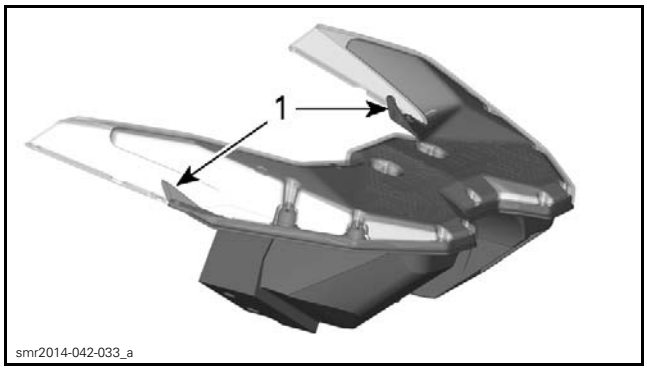

3UP BOARDING PLATFORM
1. Splash tabs

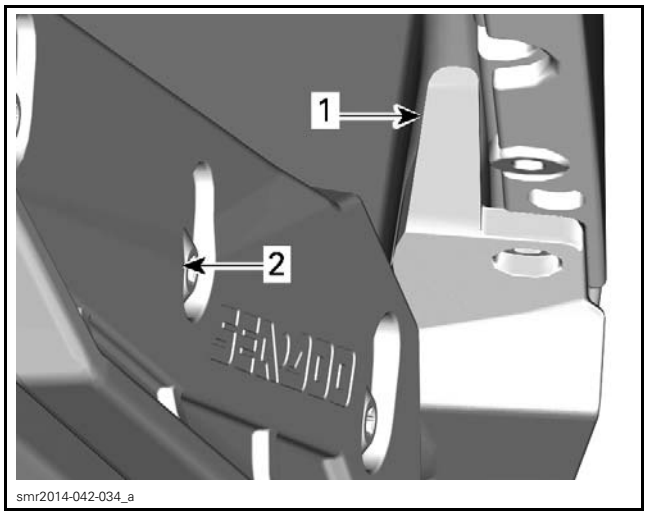

PORT SIDE - VIEW TOWARDS REAR
1. *Position of splash tab under hull*
2. *Port side sponson*

Reverse removal sequence.

Install 3UP boarding platform onto hull

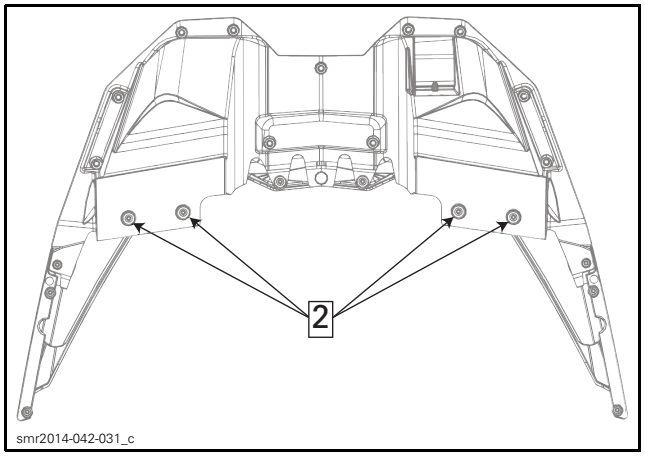

3UP BOARDING PLATFORM - VIEW FROM UNDERNEATH
2. *Ensure these points snap into place*

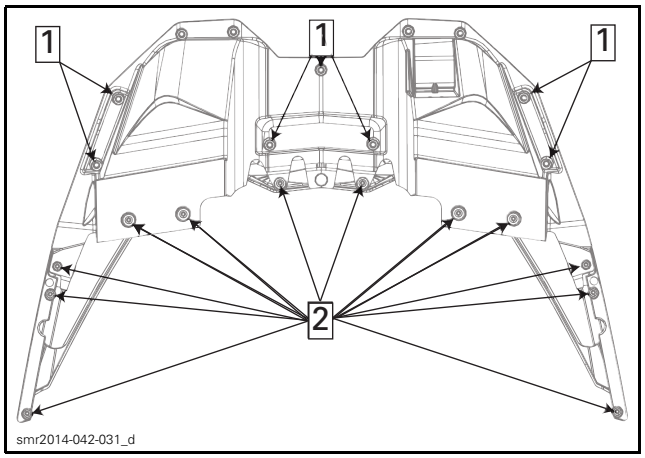

3UP BOARDING PLATFORM - VIEW FROM UNDERNEATH
1. *M6.31 X 30 hexagonal shoulder screw - tighten second*
2. *M6.81 X torx shoulder screw - install first*

TIGHTENING TORQUE	
M6.31 X 30 hexagonal shoulder screw	3.5 N•m ± 0.5 N•m (31 lbf•**in** ± 4 lbf•**in**)
M6.81 X 30 torx shoulder screw	5.5 N•m ± 0.5 N•m (49 lbf•**in** ± 4 lbf•**in**)

HULL REINFORCEMENT

There are no inserts glued to the hull of the watercraft. Instead, the watercraft makes use of hull reinforcements and carriage bolts. The starboard side hull reinforcement is also the heat exchanger and will be covered under *COOLING SYSTEM*.

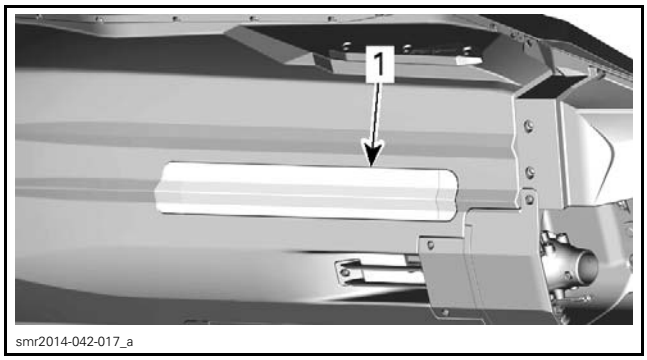

PORT SIDE HULL REINFORCEMENT - UNDER WATERCRAFT
1. *Hull reinforcement*

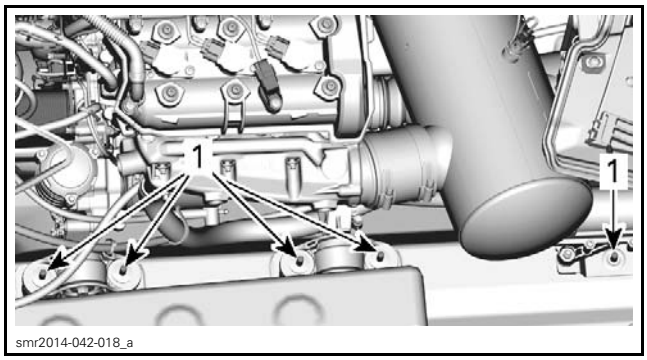

PORT SIDE HULL REINFORCEMENT - INSIDE HULL
1. *Hull reinforcement carriage bolt*

Hull Reinforcement Removal

1. Remove central body. Refer to *BODY*.
2. Remove port side engine mount clamps. Refer to *ENGINE REMOVAL AND INSTALLATION*.

NOTE: The number and position of shims under engine mount clamps are important to maintain for proper engine alignment.

3. From under watercraft, pry out hull reinforcement.

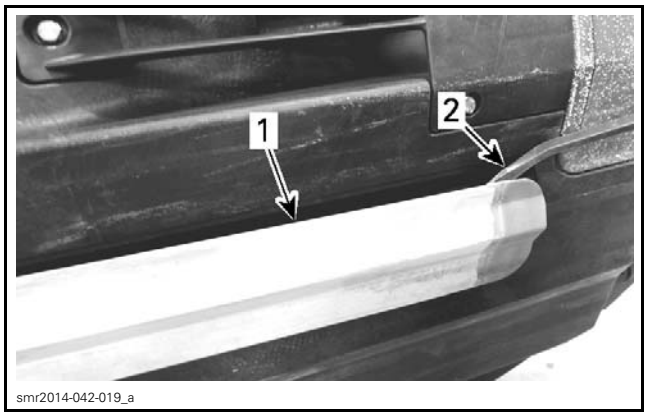

HULL REINFORCEMENT - UNDER WATERCRAFT
1. *Hull reinforcement*
2. *Prybar*

4. Clean off sealant residues from hull and hull reinforcement.

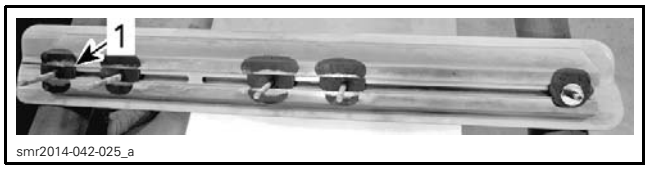

PORT SIDE HULL REINFORCEMENT
1. *Sealant residue*

Hull Reinforcement Disassembly

1. The following images represent disassembly.

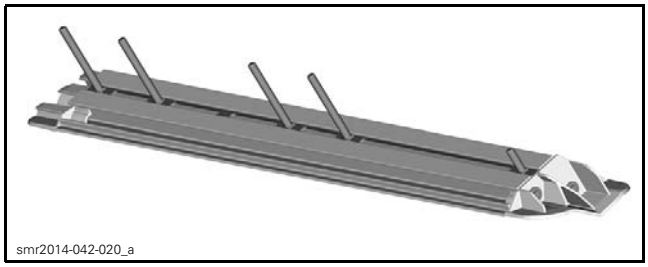

PORT SIDE HULL REINFORCEMENT

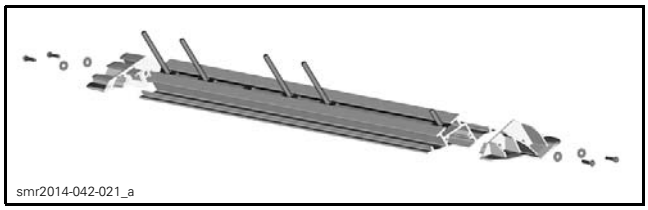

PORT SIDE HULL REINFORCEMENT

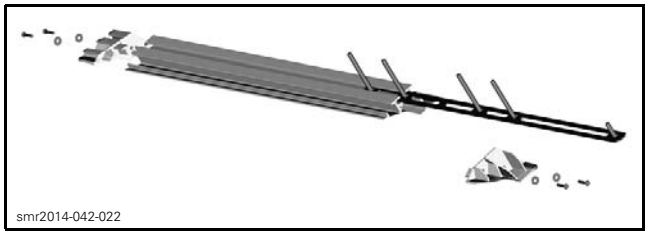

PORT SIDE HULL REINFORCEMENT

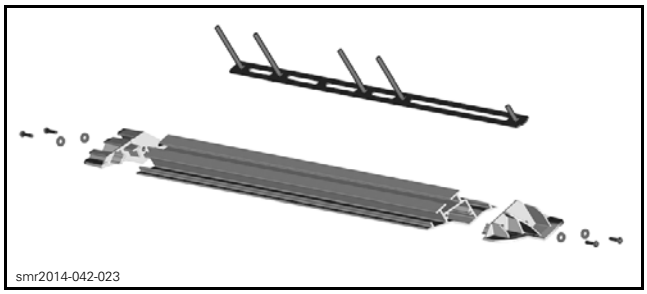

PORT SIDE HULL REINFORCEMENT

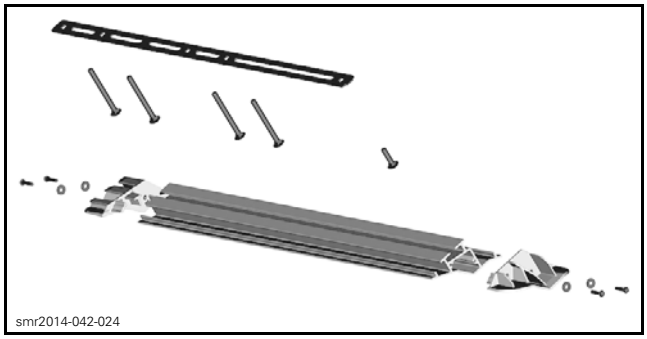

PORT SIDE HULL REINFORCEMENT

Hull Reinforcement Assembly

Hull reinforcement assembly is the reverse of disassembly.

TIGHTENING TORQUE	
M5 X 25 Shoulder screws	5 N•m ± 1 N•m (44 lbf•**in** ± 9 lbf•**in**)

Hull Reinforcement Installation

Hull reinforcement installation is the reverse of removal.

1. Apply LOCTITE 5900 (P/N 293 800 066) beads as indicated.

NOTE: Heat exchanger shown.

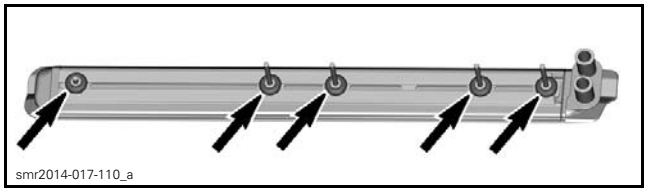

LOCTITE 5900 12 MM (15/32 IN) DIAMETER BEAD APPLICATION

INLET GRATE

Inlet Grate Removal

1. Remove central body. Refer to *BODY*.
2. Remove rear inlet grate screws.

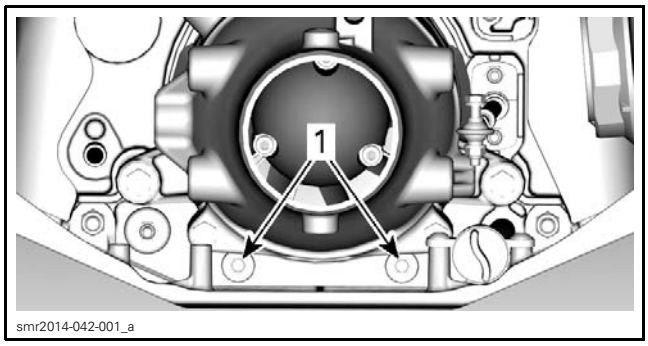

REAR VIEW - UNDER JET PUMP
1. Rear inlet grate screws

3. Remove front inlet grate screws and retaining nuts.

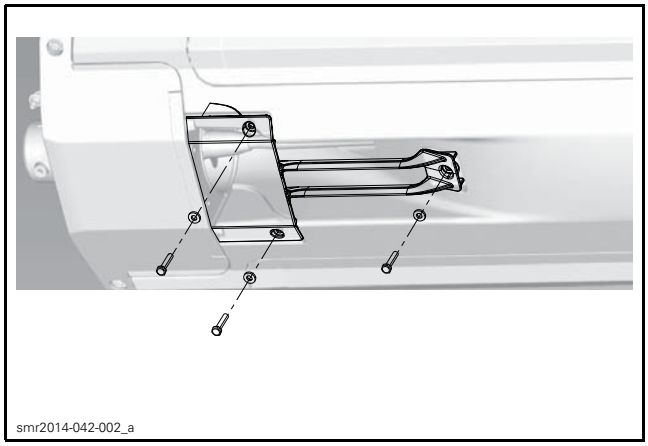

FRONT INLET GRATE SCREWS

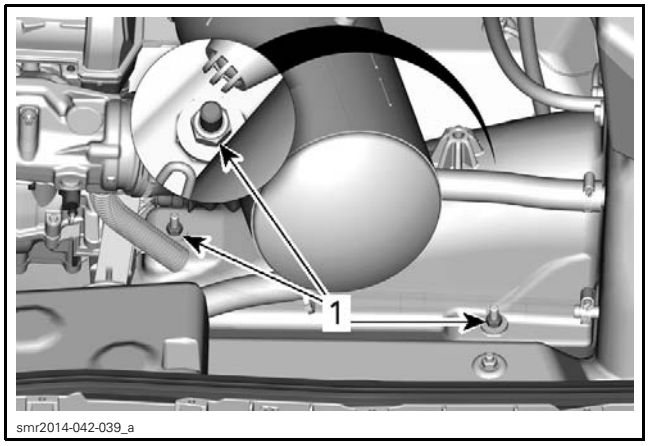

FRONT INLET GRATE RETAINING NUTS
1. Inlet grate retaining nuts

4. Remove inlet grate.

Inlet Grate Installation

1. Apply LOCTITE 5900 (P/N 293 800 066) sealant on inlet grate as indicated.

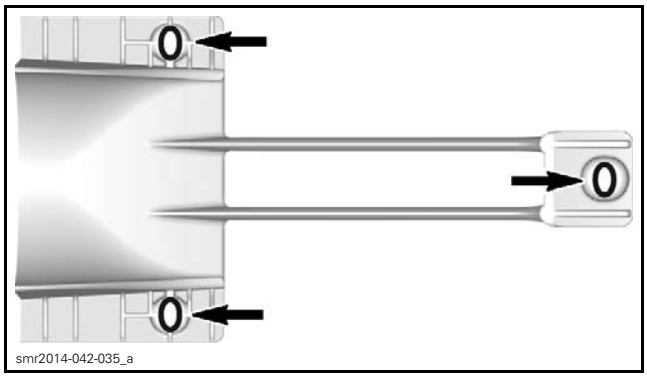

INLET GRATE SEALANT APPLICATION

2. Install inlet grate in position under watercraft.
3. Loosely install front inlet grate retaining screws and retaining nuts.

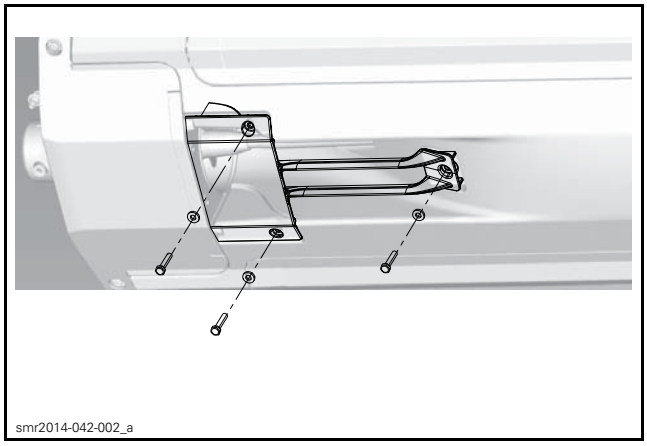

FRONT INLET GRATE SCREWS

4. Hand tighten rear inlet grate screws.

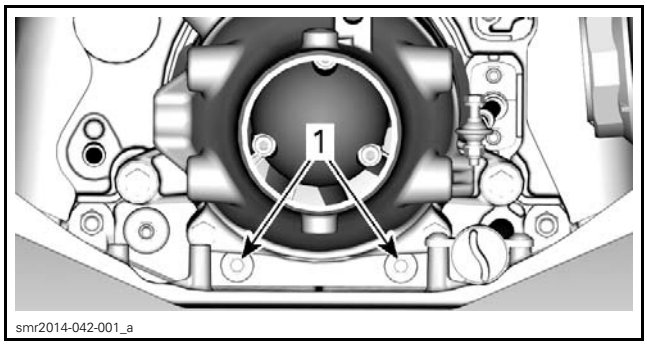

REAR VIEW - UNDER JET PUMP
1. Rear inlet grate screws

5. Tighten screws to the specified torque and sequence.

TIGHTENING TORQUE SEQUENCE		
	FASTENER	TORQUE
1	Rear inlet grate screws	2.5 N•m ± 0.5 N•m (22 lbf•**in** ± 4 lbf•**in**)
2	Front M8 inlet grate retaining nuts	24 N•m ± 2 N•m (18 lbf•ft ± 1 lbf•ft)

RIDE PLATE

Ride Plate Removal

1. Remove central and rear body. Refer to *BODY*.

3UP models

2. Remove 3UP boarding platform. See procedure in this subsection.

All models

3. Remove resonator. Refer to *EXHAUST*.
4. Cut locking tie and remove hose from drain on ride plate.

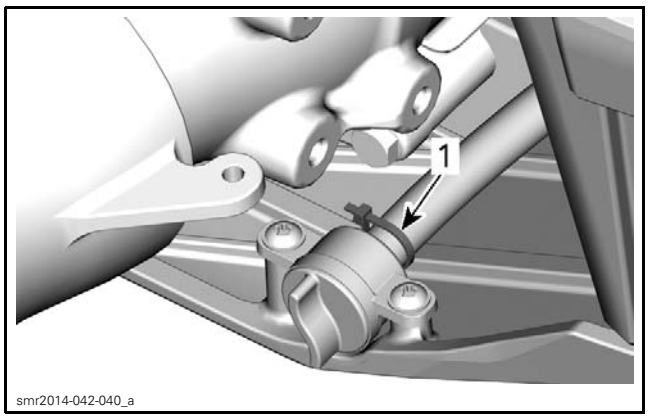

DRAIN
1. Locking tie

5. Remove and discard ride plate retaining screws.

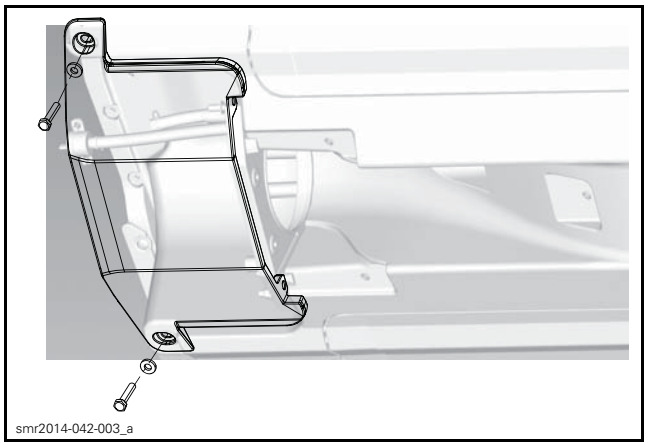

RIDE PLATE RETAINING SCREWS

6. Remove ride plate retaining nuts.

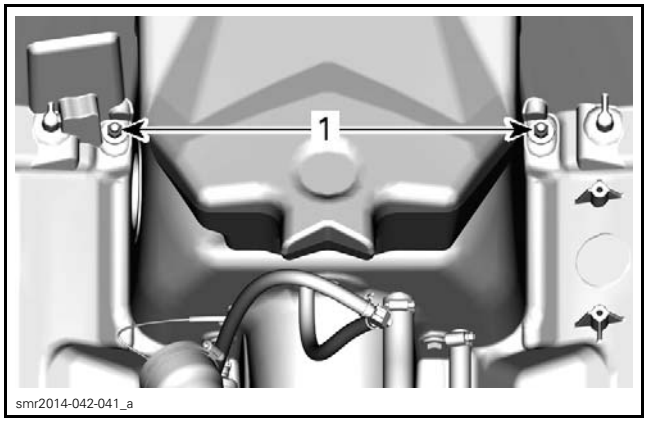

RIDE PLATE RETAINING NUTS - INSIDE HULL
1. Ride plate retaining nuts

7. Remove ride plate retaining nuts and washers.

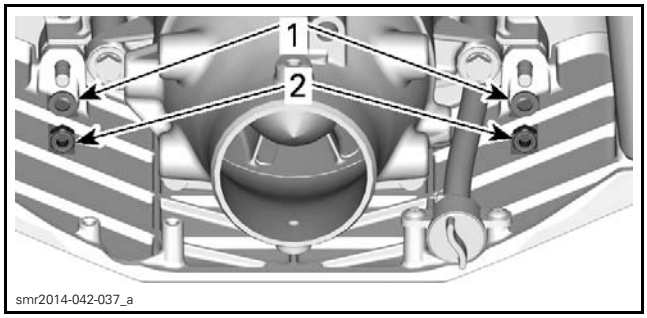

RIDE PLATE RETAINING NUTS AND WASHERS- ON JET PUMP SUPPORT
1. M8 stainless steel washers
2. Brass M8 elastic nuts

Ride Plate Cleaning

1. Carefully scrape off all excess sealant from ride plate and hull.
2. Clean hull surface with BRP HEAVY DUTY CLEANER (P/N 293 110 001) to eliminate grease, dust and sealant residue. Clean fitting threads.

Ride Plate Installation

1. Apply LOCTITE 5900 (P/N 293 800 066) sealant as illustrated.

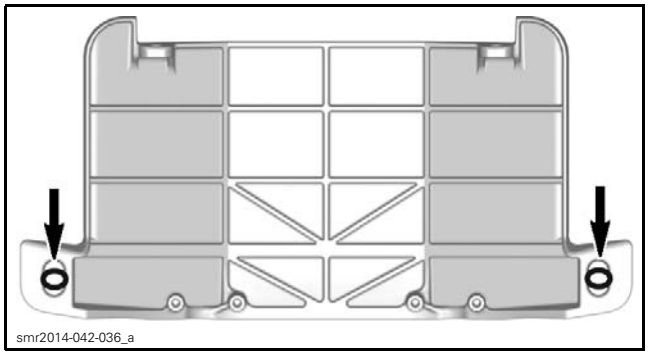

RIDE PLATE SEALANT APPLICATION

2. Position ride plate on hull.
3. Tighten ride plate retaining nuts and screws to the specified torque and sequence.

TIGHTENING TORQUE SEQUENCE		
	FASTENER	TORQUE
1	M8 Ride plate retaining nuts (on jet pump support)	25 N•m ± 1 N•m (18 lbf•ft ± 1 lbf•ft)
2	M8 Ride plate retaining nuts (inside hull)	24 N•m ± 2 N•m (18 lbf•ft ± 1 lbf•ft)

4. Reinstall other removed parts. Refer to appropriate subsections for procedures.

JET PUMP SUPPORT

Jet Pump Support Removal

1. Remove central body. Refer to *BODY*.
2. Cut locking ties on bailer elbow and pick up.

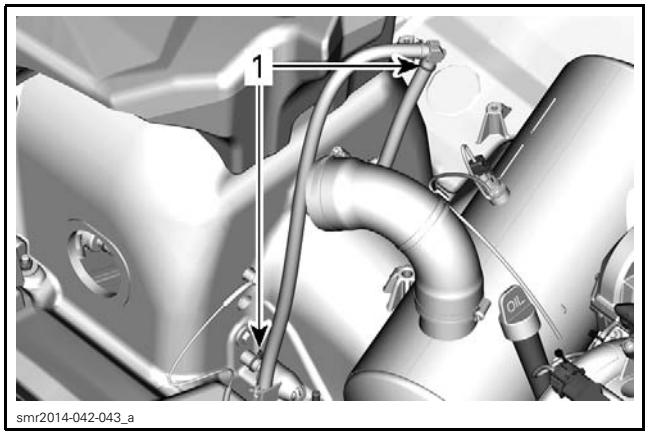

1. Locking ties to cut

3. Remove steering cable. Refer to *STEERING*.
4. Remove jet pump assembly and hose to bailer elbow. Refer to *JET PUMP*.

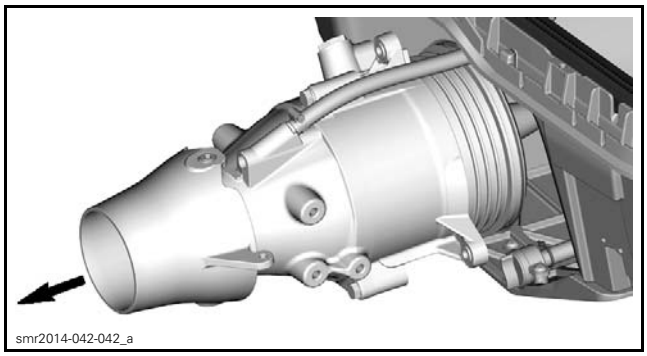

JET PUMP ASSEMBLY

5. Remove inlet grate.
6. Remove ride plate with drain and drain hose.
7. Disconnect water supply and return hoses from jet pump support.

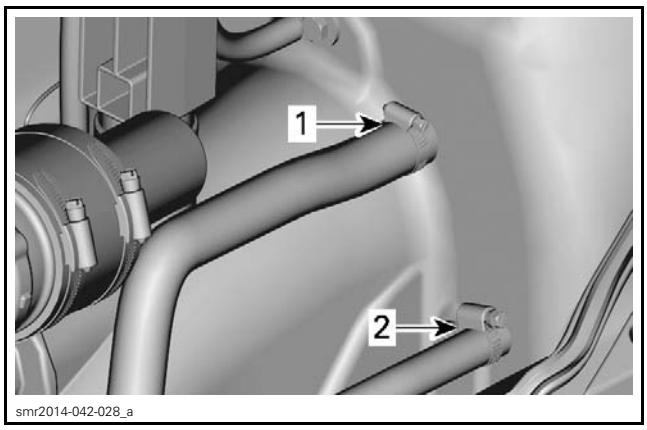

PORT SIDE - INSIDE THE HULL
1. Exhaust water supply hose
2. Exhaust water return hose

8. Disconnect ground strap.

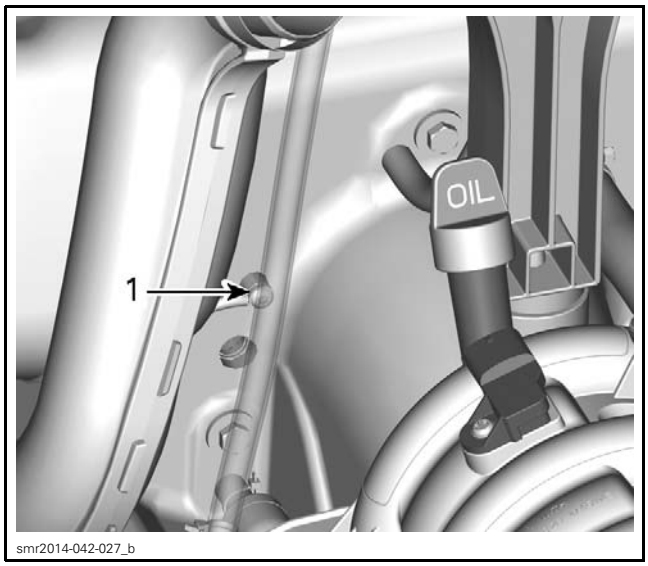

STARBOARD SIDE - INSIDE THE HULL
1. Ground strap

9. Remove jet pump support retaining screws and washers.

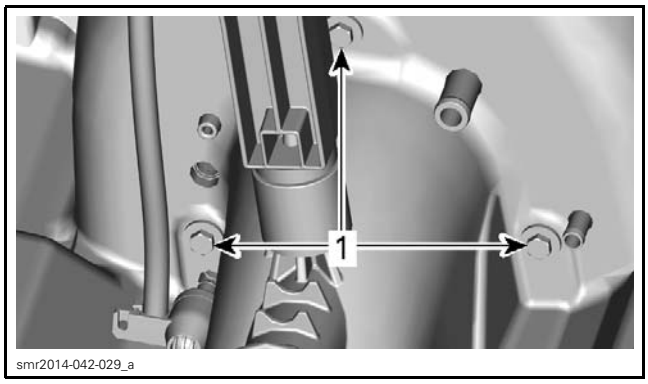

JET PUMP SUPPORT - VIEW FROM INSIDE HULL
1. Jet pump support retaining screws

10. Pull jet pump support off the hull.
11. Remove jet pump gasket.

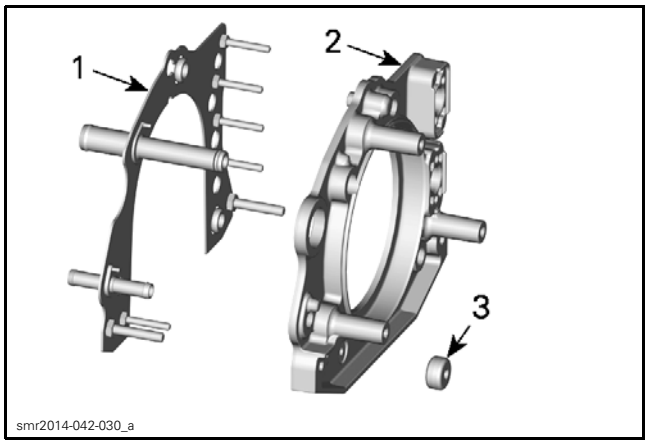

JET PUMP SUPPORT
1. Jet pump support gasket
2. Jet pump support
3. Zinc anode

Jet Pump Support Cleaning

1. Scrape off all excess sealant from jet pump support, ride plate, and hull.
2. Inspect pump support for cracks or other damage.
3. Clean jet pump support and hull surface with BRP HEAVY DUTY CLEANER (P/N 293 110 001) to eliminate grease, dust, and sealant residue.

Jet Pump Support Installation

1. Install new jet pump support gasket.
2. Position the jet pump support against the hull.

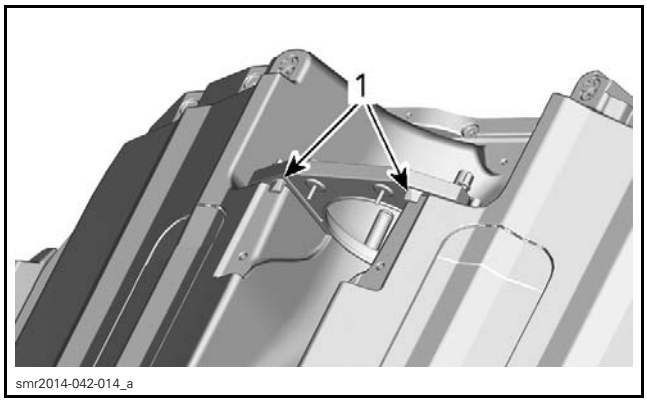

JET PUMP SUPPORT
1. Jet pump support to hull contact

3. Inside the hull, thread all 3 jet pump support screws.
4. Tighten jet pump support screws.

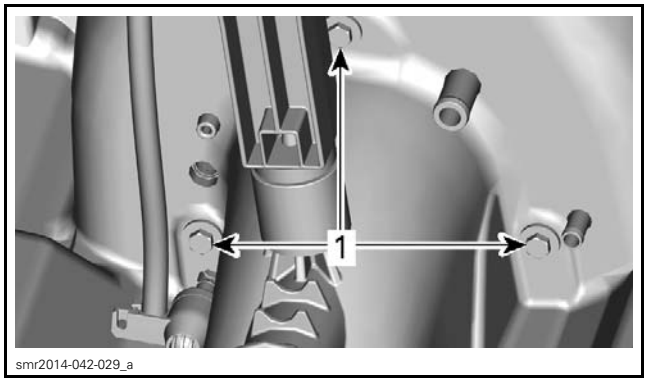

JET PUMP SUPPORT - VIEW FROM INSIDE HULL
1. Jet pump support screws

TIGHTENING TORQUE	
M8 Jet pump support screws	24 N•m ± 2 N•m (18 lbf•ft ± 1 lbf•ft)

5. Reinstall other removed parts. Refer to appropriate subsections for procedures.

FIXED REAR SPONSONS

NOTE: Removal and installation procedure for port and starboard sponsons is similar.

Refer to exploded view at the beginning of this section.

Fixed Rear Sponson Removal

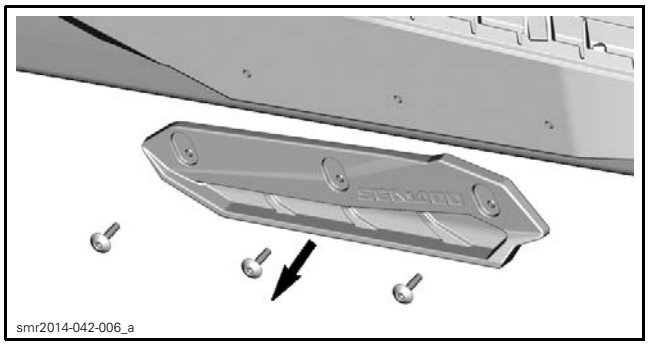

PORT SPONSON

Fixed Rear Sponson Installation

1. Clean off any silicone sealant residues from hull and sponson.
2. Apply LOCTITE 5900 (P/N 293 800 066) on back side of sponsons.

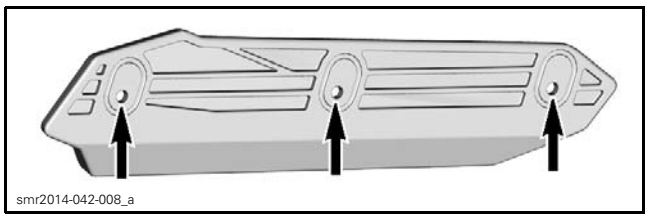

BACK OF PORT SPONSON

3. Apply a small amount of LOCTITE 5900 (P/N 293 800 066) into each hull hole.

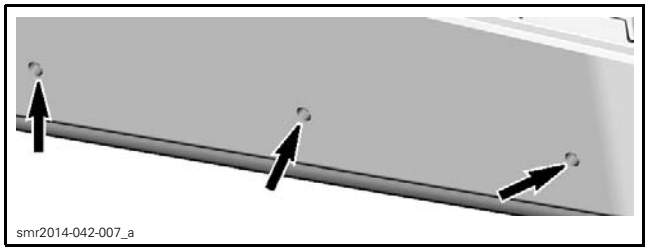

REAR PORT HULL

TIGHTENING TORQUE	
Sponson screws	11 N•m ± 1 N•m (97 lbf•**in** ± 9 lbf•**in**)

BAILER

The bailer pick up draws water from the bilge when watercraft is in operation.

The bailer pick up is connected to a syphon tube mounted in the jet pump venturi that use the jet pump thrust to create a vacuum. The bailer is also connected to the bilge drain plug on the ride plate.

Bailer Pick-Up Location

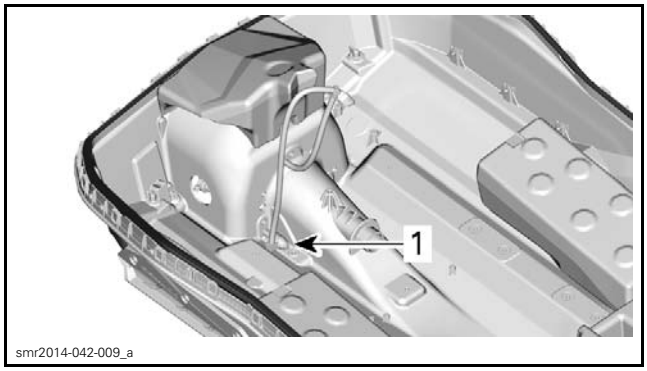

1. *Bailer pick-up*

Bailer Pick-Up Inspection

1. Check holes in the bailer pick-up to see if obstructed. Clean if necessary.
2. Check if the hole on bailer hose elbow fitting is obstructed. Clean if necessary.

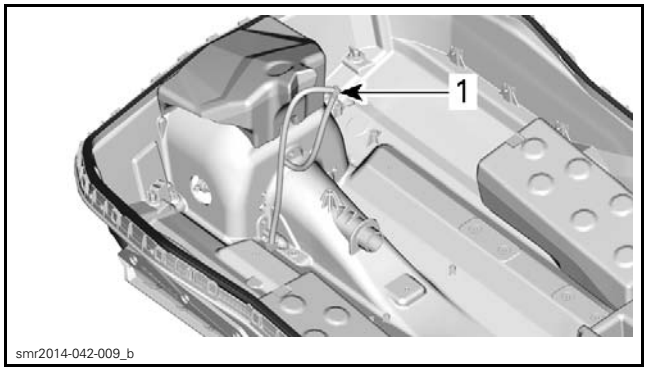

1. *bailer hose elbow fitting*

NOTE: When repositioning the bailer hose elbow fitting, position it at the highest available point on the rear support.

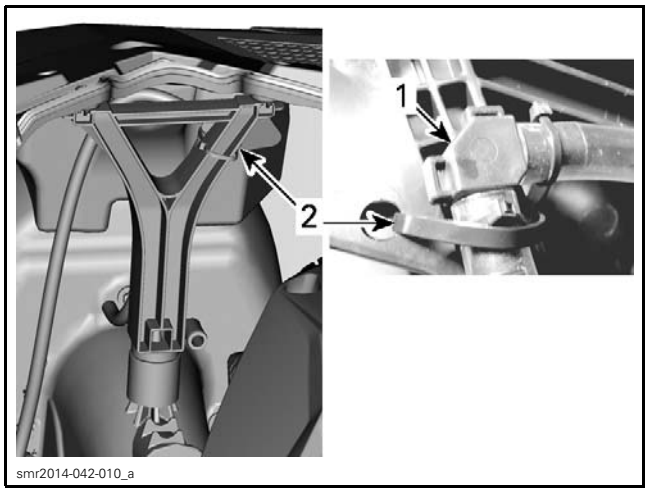

FRONT (LEFT) AND REAR (RIGHT) VIEW OF REAR SUPPORT
1. *Bailer hose elbow*
2. *Locking tie on rear support*

DRAIN PLUG

NOTE: The drain plug on the ride plate is connected to a bailer. When watercraft is off the water, the drain plug can be unscrewed to manually drain the bilge.

Drain Plug Neck Location

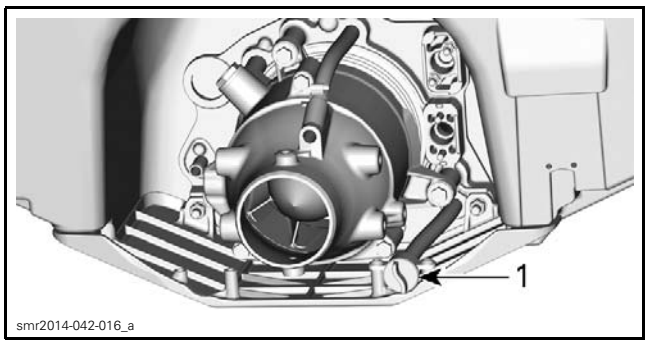

DRAIN PLUG LOCATION
1. *Drain plug*

BOW EYELET

Eyelet Access

Remove central body. Refer to *BODY*.

Eyelet Removal

1. Unscrew and discard both M8 hexagonal nuts.

NOTE: Keep all washers for installation.

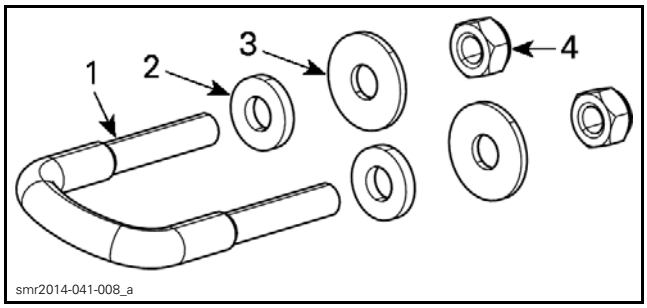

EYELET AND HARDWARE
1. *Eyelet*
2. *Small stainless steel washer - outside hull*
3. *Large stainless steel washer - inside*
4. *M8 hexagonal nuts*

2. Remove eyelet.

Eyelet Installation

TIGHTENING TORQUE	
M8 hexagonal nuts	11.5 N•m ± 1.5 N•m (102 lbf•**in** ± 13 lbf•**in**)