2013 Owner's Manual

ROBALO
BOATS

OWNER'S/OPERATOR'S MANUAL

P.O. Drawer 928
300 Industrial Park Blvd.
Nashville, GA 31639
Phone: 229-686-7481 Fax: 229-686-3660

This manual has been compiled to help you operate your boat with safety and pleasure. It contains details of the craft, typical equipment supplied or fitted, its systems and information on its operation and maintenance. Please read it carefully and familiarize yourself with your boat before using it.

If this is your first boat, or you are changing to a new type, for your own comfort and safety please ensure that you obtain handling and operating experience before "assuming command" of the boat. Your dealer or national sailing federation or yacht club will be pleased to advise you of local sea schools or competent instructors.

Please keep this manual in a secure place and hand it over to the new owner when you sell the craft.

For a complete list of standard and optional features and equipment, consult your local Robalo dealer. Due to a policy of continual product improvement, specifications are subject to change without notice. The weights and volumes shown are estimated and can vary from boat to boat because of equipment, etc.
Robalo boats meet or exceed both NMMA and U.S. Coast Guard standards.

Est. 6/11/12

ROBALO BOATS OWNER'S MANUAL

HAZARD COMMUNICATION LABELS **i**
INTRODUCTION **1-1**
WELCOME ABOARD! 1-1
ABOUT THIS MANUAL 1-1
CONSTRUCTION & STANDARDS 1-2
RESPONSIBILITIES 1-4
LAWS AND REGULATIONS 1-5
OWNER'S LOGS AND RECORDS 1-6
WARRANTY POLICY TRANFER 1-6
BOAT DATA RECORD 1-7
FUEL USAGE CHART 1-8
TRAVEL PLAN LOG 1-9
OWNERSHIP TRANSFER RECORD 1-11
BOATING SAFETY **2-1**
HAZARD COMMUNICATION 2-1
SAFETY RECOMMENDATIONS 2-1
SAFETY EQUIPMENT 2-4
RUNNING AND NAVIGATION LIGHTS 2-5
SAFETY AFLOAT 2-5
WATER SPORTS 2-12
SYSTEMS **3-1**
ELECTRICAL SYSTEMS 3-1
FUEL SYSTEM 3-8
FRESH WATER SYSTEM 3-9
MARINE SANITATION DEVICES 3-10
COMPONENTS **4-1**
DASHBOARD AND INSTRUMENT PANEL 4-1
WINDLASS SYSTEM 4-2
HYDRAULIC STEERING SYSTEM 4-2
MULTIFUNCTION NAVIGATION DISPLAY SYSTEM 4-3
THROTTLE 4-3
CONTROLS 4-3
POWER TRIM 4-3
STOVE 4-3
WATER HEATER 4-4
REFRIGERATOR 4-4
MICROWAVE OVEN 4-4
ELECTRIC GRILL 4-5
BILGE PUMP 4-5
RUNNING AND NAVIGATIONAL LIGHTS 4-5
DOCKING LIGHTS 4-5
UNDERWATER LIGHTS 4-5
STEREO SOUND SYSTEM 4-6
TELEVISION WITH DOCKSIDE CABLE INLET AND DVD PLAYER 4-6
GENERATOR 4-6
AIR CONDITIONERS 4-7
TRANSOM SHOWER 4-8
SUMP PUMP 4-8
FIRE EXTINGUISHERS 4-8
HIGH WATER ALARM 4-9
UNDERWAY **5-1**
TRANSPORTING YOUR BOAT 5-1
LAUNCHING AND LOADING 5-2
BOARDING YOUR BOAT 5-4
FUELING 5-5
OPERATING YOUR BOAT 5-7
ANCHORING YOUR BOAT 5-11
MOORING YOUR BOAT 5-13
SHUTTING DOWN THE ENGINE 5-13

Table of Contents continued on next page

Robalo Boats, LLC
Nashville, GA
robalo.com

PREVENTIVE MAINTENANCE AND REPAIR **6-1**
ENGINE 6-1
TUNE-UP 6-2
FUEL SYSTEM 6-2
MONTHLY INSPECTION 6-2
OUTBOARD DRIVE UNIT 6-2
PROPELLERS 6-3
BILGE 6-3
TROUBLESHOOTING **7-1**
INTERIOR AND EXTERIOR CARE **8-1**
FIBERGLASS AND GELCOAT 8-1
HULL BOTTOM MAINTENANCE 8-2
BOTTOM PAINT (ANTI-FOULING) 8-2
DECK HARDWARE AND FITTINGS 8-2
WINDSHIELD AND PORTHOLE 8-3
CARPET 8-3
SEAT COVERINGS AND VINYL 8-3
CANVAS (WEATHER COVERINGS) 8-4
CABIN CUSHIONS, SIDE CURTAINS AND FABRICS 8-4
WINTERIZING AND STORAGE **9-1**
LIFTING THE BOAT 9-1
DRY STORAGE AND PREPARATION 9-1
SYSTEMS AND COMPONENTS 9-2
ENGINE 9-2
FUEL SYSTEM 9-2
BATTERY 9-2
RECOMMISSIONING 9-3
NAUTICAL GLOSSARY **10-1**
WARRANTY **11-1**
WIRING SCHEMATICS **12-1**

HAZARD COMMUNICATION LABELS

Some or all of the hazard communication labels shown on the following pages can be found in various locations on your boat. If your boat is missing any of these labels, notify your Robalo dealer for replacement.

Note: Respective labels are determined by the standard and optional equipment actually installed on your boat upon delivery.

WARNING

AVOID SERIOUS OR FATAL INJURY DUE TO ROTATION OF SEAT.
LOCK SWIVEL WHEN SPEED EXCEEDS 5 M.P.H.

WARNING

OPEN FLAME COOKING APPLIANCES CONSUME OXYGEN. THIS CAN CAUSE ASPHYXIATION OR DEATH.

MAINTAIN OPEN VENTILATION DO NOT USE THIS APPLIANCE FOR COMFORT HEATING.

RAW WATER INLET GENERATOR

CLOSE SEACOCK WHEN NOT IN USE

RAW WATER INLET AIR CONDITIONER

CLOSE SEACOCK WHEN NOT IN USE

WARNING

No ventilation is provided. Fuel vapors are a fire and explosion hazard. To avoid injury or death, do not store fuel or flammable liquids here.

056-0864

WARNING

Avoid serious injury or death from fire or explosion resulting from leaking fuel. Inspect system for leaks at least once a year.

056-0864

WARNING

AVOID SERIOUS INJURY OR DEATH FROM FIRE OR EXPLOSION RESULTING FROM LEAKING FUEL. INSPECT SYSTEMS FOR LEAKS PRIOR TO USAGE OF BOAT

⚠ WARNING ⚠

LEAVING WINDOW OPEN WHILE BOAT IS UNDERWAY OR AT DOCK COULD INDUCE EXHAUST FUMES INTO CABIN CAUSING INJURY OR DEATH.

CLOSE WINDOW

⚠ WARNING ⚠

OPEN DOORS MAY CAUSE DAMAGE TO BOAT, AND/OR PERSONAL INJURY

SECURE ALL DOORS WHEN UNDERWAY

⚠ WARNING ⚠

LID MAY CLOSE SUDDENLY AND MAY CAUSE DAMAGE TO BOAT, AND OR PERSONAL INJURY

CHECK SURROUNDING AREA BEFORE CLOSING UP

⚠ WARNING ⚠

NOT A STEP
MAY BREAK CAUSING DAMAGE TO BOAT AND PERSONAL INJURY

DO NOT STEP ON DOOR

NOTICE

DO NOT USE OR DISPOSE OF PRODUCTS THAT CONTAIN CHLORINE IN THIS WASTE SYSTEM

NOTICE

SECURE WINDSHIELD DOOR WHEN UNDERWAY OR WHEN TRAILERING TO PREVENT ITEMS FROM BLOWING OUT.

NOTICE

MAIN SHORE POWER HOOK UP

⚠ DANGER ⚠

USING SKI EYE FOR TOWING, LIFTING, OR PARASAILING WILL RESULT IN DAMAGE TO BOAT AND SEVERE PERSONAL INJURY

USE ONLY TO PULL WATERSKIERS

NOTICE

AIR CONDITIONER SHORE POWER HOOK UP

CHECK FOR WATER ON SEAL BEFORE OPENING

⚠ DANGER ⚠

USING BOARDING LADDER WHILE ENGINE IS RUNNING CAN RESULT IN SEVERE PERSONAL INJURY

TURN OFF ENGINE BEFORE USING LADDER

⚠ DANGER ⚠

ANCHOR MAY MOVE CAUSING BOAT DAMAGE OR SEVERE PERSONAL INJURY

SECURE ANCHOR

⚠ WARNING

AVOID DAMAGE TO YOUR FUEL SYSTEM

DO NOT USE FUEL OR ADDITIVES CONTAINING MORE THAN 10% ALCOHOL BY VOLUME (Methanol or Ethanol)

DAMAGE AND LOSS OF WARRANTY MAY RESULT

⚠ DANGER

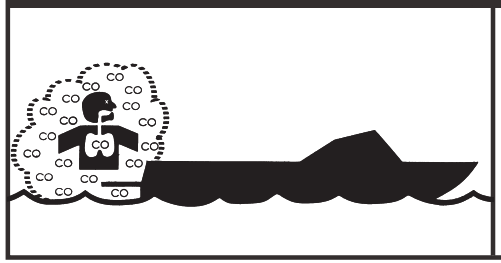

Carbon monoxide (CO) can cause brain damage or death.

Engine and generator exhaust contains odorless and colorless carbon monoxide gas.

Carbon monoxide will be around the back of the boat when engines or generators are running.

Move to fresh air, if you feel nausea, headache, dizziness, or drowsiness

NW-206-06

INTERNATIONAL SYMBOLS

Waste Water Sewage

Fresh Water

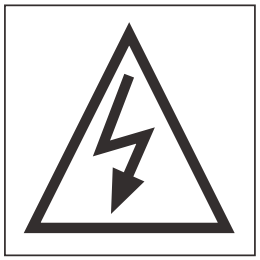

Electrical Hazard

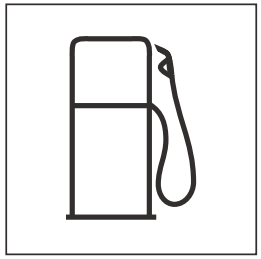

Diesel

Fuel

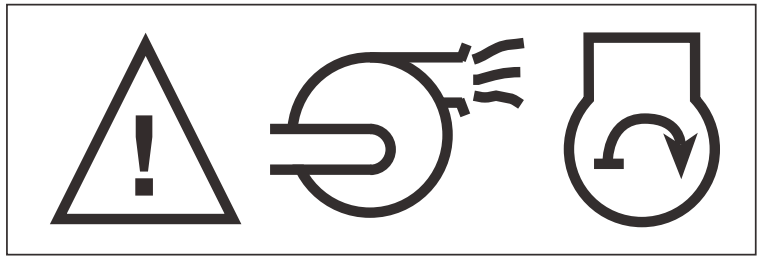

Blower Warning

BOATMAN'S CHECK LIST

For maximum enjoyment and safety, check each of these items BEFORE you start your engine:

- ✔ DRAIN PLUG (Securely in place?)
- ✔ LIFE-SAVING DEVICES (One for every person on board?)
- ✔ STEERING SYSTEM (Working smoothly and properly?)
- ✔ FUEL SYSTEM (Adequate fuel? Leaks? Fumes?)
- ✔ BATTERY (Fully charged? Cable terminals clean and tight?)
- ✔ ENGINE (In neutral?)
- ✔ CAPACITY PLATE (Are you overloaded or overpowered?)
- ✔ WEATHER CONDITIONS (Safe to go out?)
- ✔ ELECTRICAL EQUIPMENT (Lights, horn, pump, etc.?)
- ✔ EMERGENCY GEAR (Fire extinguisher, bailer, paddle, anchor & line, signalling device, tool kit, etc.?)

NMMA

© NMMA 1981

It is illegal for any vessel to dump plastic trash anywhere in the ocean or navigable waters of the United States. Annex V of the MARPOL TREATY is an International Law for a cleaner, safer marine environment. Violation of these requirements may result in civil penalty up to $25,000, fine and imprisonment.

U.S. Lakes, Rivers, Bays, Sounds and 3 miles from shore

ILLEGAL TO DUMP

Plastic & Garbage
Paper Metal
Rags Crockery
Glass Dunnage
Food

3 to 12 miles

ILLEGAL TO DUMP

Plastic
Dunnage, lining & packing materials that float, also if not ground to less than one inch:
Paper Crockery
Rags Metal
Glass Food

12 to 25 miles

ILLEGAL TO DUMP

Plastic
Dunnage, lining & packing materials that float

Outside 25 miles

ILLEGAL TO DUMP

Plastic

State and local regulations may restrict the disposal of garbage.

⚠ WARNING

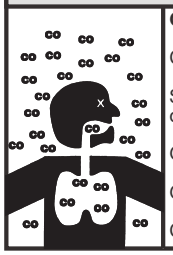

Carbon monoxide (CO) can cause brain damage or death.

Carbon monoxide can be present in the cabin.

Signs of carbon monoxide poisoning include nausea, headache, dizziness, drowsiness, and lack of consciousness.

Get fresh air if anyone shows signs of carbon monoxide poisoning.

Get fresh air if carbon monoxide detector alarm sounds.

Carbon monoxide detector must be functioning at all times.

NW-205-05

WARNING

This wakeboard tower should be used for towing wakeboard and ski devices only.
Improper use may overstress the wakeboard tower, imbalance the boat, or allow the tow rope to contact passengers.
When using the tower, watch for low bridges, overhanging tree limbs or power lines that may come in contact with the tower.
Do not use this tower for towing parasails ,kites, or other watercraft. Do not tow more than one person at a time from this tow tower. Do not allow passengers to sit behind the rope attachment point when the tower is in use.
Do not climb on, hang on, sit on top, jump or dive off this tower at any time.
Check to be certain all bolts are in place and that they are tight before using the tower.
Failure to adhere to these guidelines may cause personal injury or death.

PN#: XTM001

⚠ WARNING

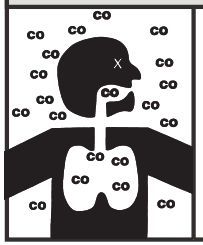

Carbon monoxide (CO) can cause brain damage or death.

Engine and generator exhaust contains odorless and colorless carbon monoxide gas.

Signs of carbon monoxide poisoning include nausea, headache, dizziness, drowsiness, and lack of consciousness.

Get fresh air if anyone shows signs of carbon monoxide poisoning.

See Owner's Manual for information regarding carbon monoxide poisoning.

NW-204-06

⚠ DANGER ⚠

CARBON MONOXIDE IS PRODUCED BY ALL GASOLINE ENGINES AND GENERATOR SETS. AVOID BRAIN DAMAGE OR DEATH FROM CARBON MONOXIDE. KEEP COCKPIT AND CABIN AREAS WELL VENTILATED. AVOID BLOCKAGE OF EXHAUST OUTLETS. SIGNS OF EXPOSURE INCLUDE NAUSEA, DIZZINESS, AND DROWSINESS. SEE BOAT OWNER©S MANUAL FOR MORE DETAILS.

USING BOARDING LADDER WHILE ENGINE IS RUNNING CAN RESULT IN SEVERE PERSONAL INJURY. TURN OFF ENGINE BEFORE USING LADDER

⚠ WARNING ⚠

THE OPERATOR OF THIS VESSEL IS RESPONSIBLE FOR THE ACTIONS OF PERSONS IN AND AROUND THIS VESSEL SAFETY IS THE OPERATORS RESPONSIBILITY

USING SWIM PLATFORM, FORWARD SUN PAD, OR SUN DECK WHILE BOAT IS UNDERWAY COULD RESULT IN SEVERE PERSONAL INJURY. STOP BOAT AND TURN OFF ENGINES BEFORE USING.

SHORE POWER

⚠ WARNING

To minimize shock hazard, connect and disconnect cable as follows;

1. Turn off boat's shore power switch.
2. Connect cable at boat first.
3. If polarity warning indicator is activated, immediately disconnect cable.
4. Disconnect at shore outlet first.
5. Close inlet cover tightly.

DO NOT ALTER SHORE POWER CABLE CONNECTORS

DISCHARGE OF OIL PROHIBITED

THE FEDERAL WATER POLLUTION CONTROL ACT PROHIBITS THE DISCHARGE OF OIL OR OILY WASTE INTO OR UPON THE NAVIGABLE WATERS AND CONTIGUOUS ZONE OF THE UNITED STATES IF SUCH DISCHARGE CAUSES A FILM OR SHEEN UPON, OR DISCOLORATION OF, THE SURFACE OF THE WATER, OR CAUSES A SLUDGE OR EMULSION BENEATH THE SURFACE OF THE WATER.

VIOLATORS ARE SUBJECT TO A PENALTY OF $25,000

NOTICE

THIS BOAT IS EQUIPPED WITH A DIRECT OVERBOARD DISCHARGE. DISCHARGING OF SEWAGE DIRECTLY OVERBOARD IS FOR USE WHERE APPROVED ONLY.

CHECK U.S. COAST GUARD AND LOCAL REGULATIONS.

DO NOT OPERATE MACERATOR DRY.

⚠ WARNING

GRILL SURFACES AND LID WILL BECOME HOT DURING AND AFTER USE.

USE EXTREME CAUTION WHEN AROUND GRILL TO AVOID BURNS.

⚠ DANGER ⚠

CARBON MONOXIDE IS PRODUCED BY ALL GASOLINE ENGINES AND GENERATOR SETS. AVOID BRAIN DAMAGE OR DEATH FROM CARBON MONOXIDE. KEEP COCKPIT AND CABIN AREAS WELL VENTILATED. AVOID BLOCKAGE OF EXHAUST OUTLETS. SIGNS OF EXPOSURE INCLUDE NAUSEA, DIZZINESS, AND DROWSINESS. SEE BOAT OWNER'S MANUAL FOR MORE DETAILS.

USING BOARDING LADDER WHILE ENGINE IS RUNNING CAN RESULT IN SEVERE PERSONAL INJURY. TURN OFF ENGINE BEFORE USING LADDER.

⚠ WARNING ⚠

THE OPERATOR OF THIS VESSEL IS RESPONSIBLE FOR THE ACTIONS OF PERSON IN AND AROUND THIS VESSEL. SAFETY IS THE OPERATOR'S RESPONSIBILITY.

USING SWIM PLATFORM, FORWARD DECK, OR SUN DECK WHILE BOAT IS UNDERWAY COULD RESULT IN SEVERE PERSONAL INJURY. STOP BOAT AND TURN OFF ENGINES BEFORE USING.

AVOID SERIOUS OR FATAL INJURY DUE TO ROTATION OF SEAT. LOCK SWIVEL WHEN SPEED EXCEEDS 5 M.P.H.

INTERRUPT SWITCH MUST BE ATTACHED TO OPERATOR WHILE ENGINE IS RUNNING. QUALIFIED OPERATOR MUST BE IN CONTROL AT ALL TIMES. READ OWNERS MANUAL BEFORE USE.

BOATMAN©S CHECK LIST

For maximum enjoyment and safety, check each of these items BEFORE you start our engine:

- ✓ DRAIN PLUG (Securely in place?)
- ✓ LIFE-SAVING DEVICES (One for every person on board?)
- ✓ STEERING SYSTEM (Working smoothly and properly?)
- ✓ FUEL SYSTEM (Adequate fuel? Leaks? Fumes?)
- ✓ BATTERY (Fully charged? Cable terminals clean and tight?)
- ✓ ENGINE (In neutral?)
- ✓ CAPACITY PLATE (Are you overloaded or overpowered?)
- ✓ WEATHER CONDITIONS (Safe to go out?)
- ✓ ELECTRICAL EQUIPMENT (Lights, horn, pump, etc.?)
- ✓ EMERGENCY GEAR (Fire extinguisher, bailer, paddle, anchor & line, signaling device, tool kit, etc?)

INTRODUCTION

WELCOME ABOARD!

Congratulations!...

on your wise decision to purchase a Robalo boat. We welcome you to the family of thousands of other Robalo boat owners. Since your boat is a substantial investment, we are sure you selected your Robalo because of its value, style, comfort, and performance. This manual contains valuable information concerning your boat's operation, maintenance, and care plus tips on boating safety and seamanship.

ABOUT THIS MANUAL

More and more people are joining the ranks of boat owners. This manual is written for the first-time boat owner or operator. Even if you are an experienced boater, you will find much valuable information regarding the safe operation and maintenance of your new Robalo boat. Keep this manual on your boat for ready reference.

Due to our policy of continuous product improvement, the illustrations used in this manual may not be identical to the components, controls, gauges, etc. on your boat, as they are intended to be representative reference views. Some controls, indicators, or information may be optional and not included on your craft.

The precautions in this manual can't and don't cover every boating situation. If a specific method or procedure is not covered, you must make sure that what you do is safe for you and others. Always use common sense when boating! Remember, too, that every safe boating excursion is a happy experience.

This manual is part of your boat's equipment. Keep it on board the boat at all times. If you transfer ownership of this boat to someone else, be sure to give this manual to the new owner.

Your owner's packet contains the manual for the boat you selected. Also in this packet are instruction manuals from the suppliers of standard and optional equipment for your boat. Examples of these manuals include the engine, electrical equipment, pumps, and cabin amenities. The suppliers of these products maintain their own manufacturer's warranty and service facilities. Be sure to fill out each warranty card and mail it to the manufacturer to validate the warranty. Record all information regarding these products on the "Boat Data Record." A copy of this form is near the end of this chapter under Logs & Records.

Important: Keep the completed Boat Data Record in a safe place at home. Do not keep it aboard the boat.

Read this manual as well as the manuals for the systems and com- ponents on your Robalo boat. They provide the information needed for safe operation and proper maintenance. The information in the manuals provided by the manufacturers takes precedence over any information in this manual if there is a conflict.

Following are summaries of each chapter in this manual:

1. Introduction

Included in this chapter is a summary of the manual plus general information about construction and standards, dealer and owner responsibilities, laws and regulations, logs and records, and the warranty for your boat.

2. Boating Safety

This chapter discusses potential hazards associated with boating, safety recommendations, safety information and practices, and water sports safety. It also discusses safety equipment needed to provide a safe operating environment.

Note: For your safety, this manual has specific safety warnings and comments where appropriate. Be sure to read the entire manual.

3. Systems

Here you will find detailed information about the electrical and fuel systems needed to operate your boat. This chapter discusses the fresh water system and marine sanitation devices which make your boating experience more comfortable.

4. Components

Standard features and optional equipment for your Robalo boat are discussed in this chapter. In general, these pertain to equipment and amenities which make your boat a "home away from home."

5. Underway

The intent of this chapter is to explain what you need to do before, during, and after your boating excursion to make it an enjoyable and safe experience.

6. Preventive Maintenance & Repairs

Preventive maintenance is the key to troublefree operation and helps protect your investment. This chapter explains what you should do to maintain your boat and how to make adjustments and repairs.

7. Troubleshooting

Every boater encounters an operating problem at one time or another. This chapter provides solutions to problems you can correct.

8. Interior & Exterior Care

This chapter tells you how to inspect, clean, and maintain your boat's interior and exterior.

9. Winterizing & Storage

What do you do when you need to winterize or store your boat for extended periods of time? This chapter provides the necessary information.

10. Nautical Glossary

The Nautical Glossary defines terms associated with your boat and terms you may encounter during your boating experience.

CONSTRUCTION & STANDARDS

All Robalo boats meet or exceed the construction standards set by the U.S. Coast Guard, the National Marine Manufacturers Association (NMMA), and the American Boat and Yacht Council (ABYC) concerning:

- Navigation lights
- Factory installed fuel systems
- Engine and fuel tank compartment ventilation
- Flotation
- Steering systems
- Backfire flame arresters

NMMA certification means that the boat complies with applicable federal regulations set forth by the U.S. Coast Guard. These regulations are based on American Boat and Yacht Council (ABYC) standards and recommended practices.

Most Robalo models can be certified to carry the CE mark. The CE mark certifies that the boat meets relevant parts of the European Directive for Recreational Craft 94/25/EC of the European Parliament, including the International Organization for Standards (ISO) and Recreational Marine Agreement Group (RMAG) guidelines in effect at the time of manufacture.

We recommend that you see your dealer if you wish to modify factory–installed equipment or add new equipment. Your dealer is qualified to make such modifications or additions without placing the safety or design integrity of your boat at risk and without invalidating the warranty.

Robalo builds exceptionally high quality boats. We offer numerous extras you won't see at a boat show. We've created a list for your review.

Gelcoat

The advanced technology polyester we use offers superior weathering resistance to surface yellowing and chalking. It will also help protect and maintain the original glossy luster of your boat's finish. Robalo uses a premium quality gelcoat which offers improved flexibility over other gelcoats, minimizing the potential for cracking.

Resin

It's an age-old problem. Water penetrates the gelcoat and blisters the bottom. The key is the resin. To cut costs, most use a general purpose resin. Robalo uses a premium quality resin in the hull skin coat of every boat in our line because of its superior bonding characteristics and exceptional flex.

Plywood

To protect their wooden components from rot and deterioration, most boat builders dip their plywood parts in a vat of protective sealant. Unfortunately, this only offers very minimal protection for the outside plies. The plywood Robalo uses throughout our boats is pressure treated with a wood preservative and fungi inhibiting chemical before it is kiln dried.

Loom Wrap Wiring

Attention to rigging detail is a Robalo hallmark. Instead of routing the engine wiring harness haphazardly in the bilge in black tape, we rely on automotive style flexguard loom that not only keeps things neat but also protects against abrasion.

Through Bolted Stainless Steel Cleats

It's one of the most often used components on your boat, but most people think a cleat is a cleat, right? Wrong. Robalo's cleats are stainless steel so they won't corrode and so they won't twist. Also, ours are big enough to accept a full-sized looped line.

Heavy Duty Rub Rail

A rub rail is supposed to protect your boat. Most don't because they're the wrong material. Robalo uses a heavy-duty PVC rub rail with stainless steel insert that absorbs far more impact without denting.

Acrylic Tops

Ours are acrylic because it's a superior material that won't crack, peel, or mildew. Further, our acrylic tops won't shrink or expand, which means they look and fit better in all weather conditions.

Stain Resistant Fabrics

Accidents happen. Spilled drinks, wet bathing suits and soggy towels are a fact of life on a boat. All our cabin fabrics are stain resistant. Buyers can choose from a wide variety of colors. When it comes to interior fabrics, we have the one that's right for you.

Superior Plastics vs. Wood

Robalo prides itself on building seats that are not only comfortable, but durable. We use plastic seats because they hold their shape and don't retain water, reducing the potential for foam deterioration.

Flotation Requirements

All Robalo boats meet or exceed U.S. Coast Guard requirements for flotation. All Robalo boats also meet or exceed U.S. Coast Guard requirements for the following:

- Engine and Fuel Tank Compartment Ventilation (requirements for flame arresting devices)
- Factory-Installed Fuel Systems
- Navigation Lights
- Steering System

RESPONSIBILITIES

Robalo's quality service does not end when you buy one of our boats. Through our dealer network we do everything possible to ensure that you are satisfied with your purchase. Every Robalo dealer has a responsibility to you, the boater.

Dealer

Dealer responsibilities include the following:

1. Discuss with you the terms of all warranties and stress the importance of registering warranties with the appropriate manufacturers.
2. Explain how you can obtain warranty service.
3. Complete new boat and pre-delivery inspection procedures.

Sign the form to certify that all items were completed.
Your Robalo dealer can provide you with thorough instruction in the operation of your boat. Please feel free to ask for assistance.

Boat Owner

Your responsibilities include the following:

1. Read this manual as well as all other manuals and information included in your owner's packet.

2. Schedule an appointment with your dealer to go over all warranties. After the appointment, complete the Robalo Boat limited warranty registration card in an envelope inside the Owner's Manual packet. Keep a record of the hull number for future reference.

3. Inspect the boat at the time of delivery to make sure all systems and components are operating properly. Robalo recommends that you refer to your engine warranty for initial inspection and service requirements.

The new boat and pre-delivery inspection form (found in your owner's manual) will help you as you inspect your new boat. After completing your inspection, sign the form to certify you have inspected the boat with your dealer.

4. Schedule an appointment with your dealer to go over the pre-delivery engine service record. Sign this record to indicate your dealer has explained this record to you.

5. Operate all equipment in accordance with the manufacturer's instructions.

6. Become familiar with all federal, state, and local laws affecting your boat and its operation.

7. Perform or provide for the appropriate periodic maintenance outlined in the manuals and service guides.

LAWS AND REGULATIONS

This section of the manual includes general information about government regulations. You, the boater, are responsible for complying with the requirements of federal, state, and local laws. If you have any questions, contact the U.S. Coast Guard or other appropriate authority.

Boat Registration

Federal and state laws require that every boat having propulsion machinery of any type must be registered in the main state of usage. Registration numbers and validation stickers must be displayed on the boat according to regulations. The registration certificate must be carried on board when the boat is in use.

Safety Equipment

The following equipment is required on all boats:

- Fire extinguishers
- Personal flotation devices (PFDs)
- Navigation lights
- Visual distress signals
- Sound signaling device

See Chapter 2 for more information about safety equipment.

Discharge of Oil

The Federal Water Pollution Control Act prohibits the discharge of oil or oily waste into or upon the navigable waters of the United States or the waters of the contiguous zone if such discharge causes a film or sheen upon, or a discoloration of, the surface of the water or causes a sludge or emulsion beneath the surface of the water. Violators are subject to a penalty.

Disposal of Plastics & Other Garbage

Plastic refuse dumped in the water can kill fish and marine wildlife and can foul vessel propellers and cooling water intakes. Other forms of waterborne garbage can litter beaches and cause illness. U.S. Coast Guard regulations therefore strictly prohibit dumping plastic refuse or other garbage mixed with plastic into the water anywhere. Further, the regulations restrict the dumping of other forms of garbage within 12 miles from shore on the east coast, and 9 miles from shore on the west coast.

Within 3 miles of shore and in U.S. lakes, rivers, bays and sounds, it is illegal to dump plastic, dunnage, lining, and packing materials that float; and any garbage except dishwater, gray water, and fresh fish parts.

Between 3 and 12 miles it is illegal to dump plastic, dunnage, lining, and packing materials that float; and any garbage not ground to less than one square inch.

Between 12 and 25 miles it is illegal to dump plastic, dunnage, and packing materials that float.

Beyond 25 miles it is illegal to dump plastic.

The U.S. Coast Guard has issued these regulations to implement Annex V of the International Convention for the Prevention of Pollution from Ships, 1973, commonly known as Annex V of the MARPOL (Marine Pollution) Treaty 73/78. They apply to all U.S. vessels wherever they operate (except waters under the exclusive jurisdiction of a state), and foreign vessels operating in U.S. waters out to and including the Exclusive Economic Zone (200 miles).

If your boat is 26 feet or more in length, the regulations require U.S. recreational boaters attach one or more Coast Guard Trash Dumping Restrictions placards to your boat. The placard warns against the discharge of plastic and other garbage within U.S. navigable waters and specifies discharge restrictions beyond the territorial sea (generally within 3 or more nautical miles of shore).

The placard must also contain the warning that a person violating these requirements is liable for civil and criminal penalties. The placard must also state that local regulations may further restrict the discharge of garbage. You may purchase these placards from local marinas, boat dealers, or marine equipment suppliers.

The U.S. Coast Guard has also issued regulations requiring boats to have a sanitation system on board to control pollution. Wastes are to be stored in a holding tank or other device, such as a Porta-Potti, until the device can be pumped out or otherwise disposed of at a shore facility. Discharging this waste overboard is in most cases prohibited. Check with the Coast Guard regarding regulations in your area.

OWNER'S LOGS AND RECORDS

At the end of this chapter are three forms which you will find very helpful.

Use the Boat Data Record to record all important information about your boat and the major components installed. After you have entered all the data, remove this form from your Owner's Manual and store in a safe place. Do not keep this form aboard your boat.

The Travel Plan Log provides a record of your destination, departure and return times, boat description, passenger list, and other information about the trip you have planned. At the bottom of the form is space for listing emergency telephone numbers in case your return is delayed past the expected time. It also has space for indicating information about the person filing this report. Leave the completed form ashore with a responsible person. We recommend you make several copies of this form each boating season to ensure an ample supply.

The Fuel Usage Chart is a handy way to record information covering engine hours, fuel consumption, miles traveled, as well as RPM (revolutions per minute), Average MPH (miles per hour), and GPH (gallons per hour).

WARRANTY POLICY TRANFER

Your Robalo boat is backed by a Limited Express Warranty. It is important that you are aware of its terms. If a problem arises with your Robalo boat as a result of workmanship or materials, contact your dealer as soon as possible to determine whether correcting the problem may be covered by the warranty. Please have your hull identification number and necessary model numbers on hand for the items that may need service or repair. Your hull identification number is below the rub rail on the starboard aft corner of your boat.

The Robalo Limited Warranty Policy may be transferred to subsequent owner(s) providing the Ownership Transfer Record (OTR) is completed and returned to the Robalo Customer Service Office. The OTR is located at the end of this chapter. Subsequent owner(s) will receive the balance of warranty available subject to a $100.00 deductible per occurrence for claims filed in accordance with the Robalo Limited Warranty Policy. The Ownership Transfer fee is $500.00 for boats with hull lengths less than 26 feet and $1,000 for boats with hull lengths of 26 feet or more.

BOAT DATA RECORD

Purchase Dealership

Name _____ Sales Manager _____

Address _____ Phone _____

_____ Fax _____

Service Dealership

Name _____ Service Manager _____

Address _____ Phone _____

_____ Fax _____

General

Model Name _____ State of Registration _____

Hull Identification Number _____

Boat Name _____

Hull Color(s) _____

Length _____ Beam _____ Weight _____

Draft (Drive Down) _____ Draft (Drive Up) _____

Freeboard (Fore) _____ Freeboard (Aft) _____

Engine

Manufacturer _____ Model Name/Number _____

Oil Type/SAE _____ Quarts _____ Filter Type _____

Serial Number _____

Fuel System

Tank Capacity _____ Filter Type _____

Fresh Water

Tank Capacity _____

Propeller

Manufacturer _____ Pitch _____

Model Number _____

Battery

Manufacturer _____

Model Number _____

Radio

Manufacturer _____ Type _____

Model Number _____

Serial Number _____

Key Numbers

Cabin _____

Glove Box _____

Ignition _____

- Design Category: A B C D (circle one)
- Maximum Rated Engine Power — kilowatts (horsepower) _____
- Unladen Weight — kilograms (pounds) _____
- Maximum Load:

  Weight — kilograms (pounds) _____

  Number of People _____

FUEL USAGE CHART

Date	RunTime (In Hours)	Fuel Used (In Gallons)	Distance Traveled (In Miles)	RPM	Average Miles Per hour	Gallons per Hour

Date	RunTime (In Hours)	Fuel Used (In Gallons)	Distance Traveled (In Miles)	RPM	Average Miles Per hour	Gallons per Hour

TRAVEL PLAN LOG

The boat listed below should return by:

_____ Date _____ Time at the latest.

If it has not, please call the emergency numbers listed at the right.

Police _____

Coast Guard _____

Other Authority _____

Personal _____

Trip Information

Departure Date/Time _____ Departure Location _____

Return Date/Time _____ Return Location _____

Boat Description

Boat Name _____ Type _____

Registration Number _____ Manufacturer _____

Length _____

Hull Color _____ Deck (Color) _____

Cabin (Color) _____ Trim (Color) _____

Other Physical Characteristics _____

Engine

Type _____ HP _____

Fuel Type _____ Fuel Capacity _____

Safety & Emergency Equipment
(YES/NO & NUMBER)

Life Jackets _____ Cushions _____ Distress Light _____

Flares _____ Smoke Signals _____ Flash Light _____

Mirror _____ Paddles _____ Anchor _____

Food _____ Water _____ Life Raft _____

Radio

Onboard (Yes/No) _____ Type _____

Frequencies usually used or monitored _____

Passenger List (Use Another Sheet If Necessary)

Full Name _____

Age/Sex _____ Phone Number _____

Complete Address _____

Full Name _____

Age/Sex _____ Phone Number _____

Complete Address _____

Full Name _____

Age/Sex _____ Phone Number _____

Complete Address _____

Full Name _____

Age/Sex _____ Phone Number _____

Complete Address _____

ALWAYS FILL THIS SHEET OUT COMPLETELY—IN AN EMERGENCY ALL INFORMATION MAY BE HELPFUL

CUSTOMER SATISFACTION
NEW BOAT AND PRE-DELIVERY
OPERATION RECORD (PDOR)

ROBALO BOATS

Boat ID Number ☐☐☐☐☐☐☐☐☐☐☐☐☐☐☐☐☐

Boat Model: _____ Date of Sale: _____

Dealer Name: _____ City _____ State _____

Owner Name: _____ Delivery Promise Date/Time _____ Sales Person _____

CHECK, INSPECT AND PERFORM THE FOLLOWING OPERATIONS

CHECK BOXES BELOW AS NEEDED
OK
NEEDS CORRECTION
COMPLETED

Boat:

- ☐☐☐ Boat gel coat and striping
- ☐☐☐ Upholstery clean and free of defects
- ☐☐☐ Windshield alignment
- ☐☐☐ Canvas Fit
- ☐☐☐ Clearcoat removal from tape stripes
- ☐☐☐ Check cabin/console doors, hatches, cabinets and head doors, latches work smoothly, H-top and T-top doors & latches work properly.
- ☐☐☐ Check all thru hull fittings, vanity drain, galley drain, anchor well drain, drain plug-hull, toilet hoses, livewell

Equipment:

☐☐☐ TV/DVD	☐☐☐ VHF Radio	☐☐☐ Horn
☐☐☐ Filler Cushion Fit	☐☐☐ Bilge Pumps	☐☐☐ Wipers
☐☐☐ Running Light	☐☐☐ Auto bilge floats	☐☐☐ Bilge Blower
☐☐☐ Cabin Light	☐☐☐ Stove operates	☐☐☐ Dockside Power
☐☐☐ Mast Light	☐☐☐ Generator	☐☐☐ Refrigerator
☐☐☐ Cockpit Lights	☐☐☐ Air Conditioner	☐☐☐ Steering oil level
☐☐☐ Spreader Lights	☐☐☐ Tables & Legs	☐☐☐ CO Detector
☐☐☐ Stereo	☐☐☐ Microwave	☐☐☐ Toilet Operates
☐☐☐ Stereo Remote	☐☐☐ Trim Tabs	☐☐☐ Bow Thruster
☐☐☐ Anchor/Rode	☐☐☐ Windlass	☐☐☐ VHF Radio
☐☐☐ Overhead Lights	☐☐☐ Livewell Pumps	☐☐☐ Fishbox Pumps

- ☐☐☐ Check water heater system
- ☐☐☐ Water & waste winterized
- ☐☐☐ Water pressure system operates (Let pressure stand 15 minutes to see if pump goes on)

Engine:

- ☐☐☐ Check fuel system for leaks
- ☐☐☐ Primary steering system complete operational check
- ☐☐☐ Steering system purged correctly
- ☐☐☐ Throttle control cable, travel, and attached fasteners
- ☐☐☐ Shifter control cable, travel, and attaching fasteners
- ☐☐☐ Prop installed properly with nut, keys, cotter pins
- ☐☐☐ **Prop Size: Port**_____**Stbd**_____
- ☐☐☐ Prop rotation
- ☐☐☐ Safety neutral switch, engine will not start in gear
- ☐☐☐ Engine emergency shut off, engine will not start when disconnected
- ☐☐☐ Rigging hoses and fuel primer bulbs properly routed
- ☐☐☐ Battery cables and ground wires connected properly

CHECK BOXES BELOW AS NEEDED
OK
NEEDS CORRECTION
COMPLETED

After Starting Engine (in water or tank test):

- ☐☐☐ Trim gauge sync
- ☐☐☐ Check fuel line connectors for leaks
- ☐☐☐ Idling speed set within proper range for engine
- ☐☐☐ Gear shift works properly forward, reverse, neutral
- ☐☐☐ Instruments register properly
- ☐☐☐ Engine emergency shut off, engine stops when disconnected
- ☐☐☐ Water is coming out of pitot tube properly
- ☐☐☐ Engine charging batteries properly

Running Water Test:

- ☐☐☐ Boat performance
- ☐☐☐ Port engine performance
- ☐☐☐ Starboard engine performance
- ☐☐☐ Steering operates freely
- ☐☐☐ Fuel flow working correctly
- ☐☐☐ Power steering operates correctly (if equipped)
- ☐☐☐ Trim tabs operate correctly
- ☐☐☐ Engine trims correctly
- ☐☐☐ Instruments register properly
- ☐☐☐ Livewell systems operate correctly
- ☐☐☐ Review gauge operation

PRE-DELIVERY FINAL CHECK

- ☐☐☐ All accessory equipment operates and on board
- ☐☐☐ Carpets installed
- ☐☐☐ All boat, engine, and accessory literature and manuals ready
- ☐☐☐ Owner familiarized with operation and warranty policy
- ☐☐☐ Warranty cards completed and mailed for owner
- ☐☐☐ Boat properly cleaned, interior and exterior

Above services performed by _____
Technician Date

Dealer comments (refer to checklist by item) _____

_____

_____

Customer Signature _____

Comments _____

_____

DEALER COPY (WHITE) / CUSTOMER COPY (YELLOW)

OWNERSHIP TRANSFER RECORD

Please complete the following information and return to Robalo with the correct transfer fee amount and a copy of the bill of sale or other evidence of purchase within 30 days after purchase from the original retail purchaser. Certified Checks or money orders should be made payable to Robalo Boats.

Current Owner	***Transfer To***
Address	***Address***
City, State, Zip	***City, State, Zip***
Hull Identification Number	***Date of Sale***
Signature	***Signature***

To register the transfer, the second purchaser must mail the following to Robalo Warranty Transfer, P. O. Drawer 928, Nashville, GA 31639 no later than thirty (30) days after the purchase from the *original* purchaser: (1) An Ownership Transfer Record completed by the *original purchaser* and the subsequent owner; (2) A copy of the bill of sale or other evidence of purchase of the boat from the *original* purchaser, including the model and hull identification number; and, (3) the warranty transfer fee as follows:

- $500.00 for any hull length less than 26 feet
- $1,000 for any hull length 26 feet or greater

Note transfer fees are waived for Dealer Demonstrator Boats.

Upon receipt of this transfer record the new owner shall receive the outstanding balance of the ONE-YEAR TRANSFERABLE LIMITED WARRANTY and the FIVE-YEAR TRANSFERABLE LIMITED STRUCTURAL HULL WARRANTY initiated by the original purchaser. *Subsequent owner(s) to the original purchaser shall be responsible for a $100.00 deductible per occurrence for any claim filed in accordance with the Robalo Limited Warranty Policy.*

Please refer to the Robalo Owners Manual for detailed provisions concerning the Robalo Limited and Structural Warranty Policies. Robalo Boats LLC reserves the right to deny transfer of warranty to subsequent owners.

Questions concerning the Robalo Warranty Policy should be submitted in writing to the Robalo Customer Service Office, P.O. Box 928, Nashville, GA 31639.

BOATING SAFETY

YOU are responsible for your safety and your boat, as well as the safety of passengers and other boaters.

HAZARD COMMUNICATION

As you read this manual, please note the hazard warnings which alert you to safety precautions related to unsafe conditions or operating procedures. We have included these warnings because we are concerned about your safety and the safety of your passengers. Hazard statements generally have five parts:

1. The hazard symbol

2. A signal word which indicates the severity of the hazard

3. A concise description of the hazard

4. The results of ignoring the hazard

5. Steps for avoiding the hazard

The three signal words indicating the severity of the hazard are danger, warning, and caution. The meanings they convey are as follows:

⚠ DANGER

DANGER: calls attention to immediate hazards that WILL result in severe personal injury or death.

⚠ WARNING

WARNING: identifies hazards or unsafe practices that COULD result in severe personal injury or death.

⚠ CAUTION

CAUTION: indicates hazards or unsafe practices that COULD result in minor personal injury or product or property damage.

Note: This is a general advisory statement relating to equipment operation and maintenance procedures. Its intent is to call attention to information more important than normal text.

SAFETY RECOMMENDATIONS

The popularity of boating and other water sports has grown tremendously in the past few years. Boating safety and the safety of your passengers are your responsibilities. You should fully understand and become familiar with the operating procedures and safety precautions in this manual and the other manuals in the owner's packet before you launch your Robalo boat.

Remember that along with the freedom and exhilaration of boating comes the responsibility that you have for the safety of your passengers and the other boaters who share the water with you. Throughout this manual specific precautions and symbols identify safety-related information. Be sure to pay close attention to them.

Safe Operation

- Keep your boat and equipment in safe operating condition. Inspect the hull, engine(s), safety equipment, and all boating gear regularly.
- Be very careful when fueling your boat. Be sure you know the capacity of your boat's fuel tank and the amount of fuel you use when operating at frequently used engine speeds (RPMs). Ask your Robalo dealer about the capacity of your boat's fuel tank.
- Make sure you have enough fuel and outboard oil on board for anticipated cruising requirements. In general, use 1/3 of your supply to reach your destination and use 1/3 to return. Keep 1/3 in reserve for changes in your plans due to weather or other circumstances.
- Be sure lifesaving and fire extinguishing equipment is on board. This equipment must meet regulatory standards and it should be noticeable, accessible, and in safe operating condition. Your passengers should know where this equipment is and how to use it.
- Keep an eye on the weather. Be aware of possible changing conditions by checking local weather reports before your departure. Monitor strong winds and electrical storms closely.
- Always keep accurate, updated charts of the area on board your boat.
- Before you leave the port or harbor, file a Travel Plan with a family member, relative, friend, or other responsible person ashore.
- Always operate your boat with care, courtesy and common sense.
- Instruct at least one other passenger aboard in the basic operating procedures in handling your boat. This person can take over if you unexpectedly become unable to do so.
- Do not allow passengers to ride on parts of your boat other than designated seating areas.
- Ask all passengers to remain seated while the boat is in motion.
- Do not use the swim platform or boarding ladder while the engine or engines are running.
- Understand and obey the "Rules of the Road." Always maintain complete control of your boat.
- Do not overload or improperly load your boat.

The information on your boat's capacity plate does not override your responsibility for using common sense or sound judgment. Turbulent water and unfavorable weather conditions reduce the capacity of your boat.

Swimming

1. Swim only in areas designated as safe for swimming. These are usually marked with a swim area buoy (see figure). Do not swim alone or at night.
2. Do not allow anyone near the propeller(s), even when the engine is off. Propeller blades can be sharp and can continue to turn even after the engine is off. Stay well away from areas marked by a diver down float (see figure).

Safe Boating Courses

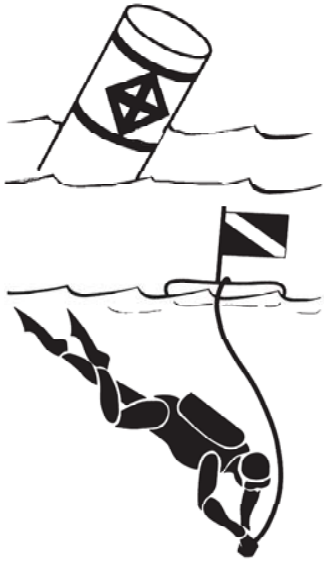

Your local U.S. Coast Guard Auxiliary and the U.S. Power Squadrons offer compre- hensive safe boating classes several times a year. You may contact the Boat/U.S. Foundation at 1-800-336-BOAT (2628), or in Virginia 1-800-245-BOAT (2628). For a course schedule in your area you may also contact your local U.S. Coast Guard Auxiliary or Power Squadron Flotilla for the time and place of their next scheduled class.

U.S. Coast Guard Website: www.uscg.mil

Power Squadron Website: www.usps.org

Voluntary Inspections

State boating officials in many states or the U.S. Coast Guard Auxiliaries offer courtesy inspections to check out your craft. They will check your boat for compliance with safety standards and required safety equipment. You may voluntarily consent to one of these inspections and you are allowed time to make corrections without prosecution. Check with the appropriate state agency or the Coast Guard Auxiliary for details.

Rules of the Road

All responsible boaters comply with the "Rules of the Road," the marine traffic laws enforced by the U.S. Coast Guard. There are two sets of rules: the United States Inland Navigational Rules and the International Rules. The United States Inland Rules apply to all vessels inside the demarcation lines separating inland and international waters. The Coast Guard publishes the "Rules of the Road" in its publication "Navigational Rules, International-Inland." You can get a copy from your local U.S. Coast Guard Unit or the United States Coast Guard Headquarters, 1300 E. Street NW, Washington, D.C. 20226.

Other helpful publications available from the U.S. Coast Guard include "Aids to Navigation" (U.S. Coast Guard pamphlet #123), which explains the significance of various lights and buoys; the "Boating Safety Training Manual"; and "Federal Requirements For Recreational Boats." Check with your local Coast Guard station, your Robalo dealer, or a local marina about navigational aids unique to your area.

U.S. Coast Guard Website: www.uscg.mil

California Coast Guard Website: www.ccg-ggc.gc.ca

If you have a marine radio telephone, heed storm warnings and answer any distress calls from other boats. The word "MAYDAY" spoken three times is the international signal of distress. Monitor marine radio channel 16 which is reserved for emergency and safety messages. You can also use this channel to contact the Coast Guard or other boaters if you have trouble.

Important: Never send a "MAYDAY" message unless there is a serious emergency and you are in need of immediate assistance.

Warning Markers

Always check with local authorities concerning regional hazardous areas and how they are marked. Other considerations include:

- Boat operators must be able to recognize marine flag designs and respond accordingly.
- Caution should always be exercised relative to swimmers. Swimming areas may not always be marked.
- Navigation markers identify navigable routes and indicate water hazards. Boat operators should familiarize themselves with these important navigational tools and operate their boats accordingly.
- Be prepared to assist anyone flying a 'distress' flag as they are requesting immediate assistance.

Drugs and Alcohol

Drugs and alcohol affect a person's ability to make sound judgments and react quickly. A responsible boater refrains from using drugs or alcohol while operating their boat. Operation of motorized vessels while under the influence carries a significant penalty. Drugs and alcohol decrease your reaction time, impair your judgement, and inhibit your ability to safely operate your boat.

SAFETY EQUIPMENT

Important: Federal law requires you to provide and maintain safety equipment on your Robalo boat. As the boat owner, you are responsible for supplying all required safety equipment. Consult your Coast Guard, state, and local regulations to ensure your boat has all required safety equipment on board. Additional equipment may be recommended for your safety and that of your passengers. Make yourself aware of its availability and use.

Personal Flotation Devices (PFDs)

There must be one United States Coast Guard approved wearable personal flotation device of Type I, II, or III for each person on board or being towed on water skis, water sports tubes, kneeboards, etc. and one Type IV throwable device on board. The PFDs must be of a suitable size for each person aboard and must be in serviceable condition and readily accessible.

PFD Type I, Wearable: This off-shore life jacket has the greatest buoyancy. It is most effective for all waters where rescue may be delayed. Its design allows for turning most unconscious persons in the water from a face down position to a vertical or face-up position.

PFD Type II, Wearable: This near-shore buoyant vest provides less buoyancy than a Type I PFD. It is intended for calm inland water or waters where there is a chance of quick rescue. It turns its wearer to a face-up position as does the Type I PFD, but the turning action is not as pronounced as the Type I, and it will not turn as many persons under the same conditions as a Type I.

PFD Type III, Wearable: Classified as a flotation aid, this PFD allows wearers to place themselves in a vertical or face-up position in the water. Type III has the same minimum buoyancy as a Type II PFD. It has little or no turning ability. People participating in water sports often prefer this PFD because it intended for use in waters where quick rescue is possible and it is generally the most comfortable for continuous wear.

PFD Type IV, Throwable: You must also have aboard at least one throwable PFD Type IV device. The Type IV device can be thrown to a person in the water and grasped and held by the user until rescued. The design does not allow it to be worn. The most common Type IV PFDs are buoyant cushions or ring buoys. This PFD must be immediately available for use and in serviceable condition.

PFD Type V: Must be worn to be effective. When inflated, it provides buoyancy equivalent to Type I, II, or III PFDs.

Fire Extinguishers

As the boat owner, you are responsible for making sure you have the required number of fire extinguishers. Fire extinguishers must be approved by the U.S. Coast Guard.

Boats longer than 26 feet and shorter than 40 feet: Two Type B-1 or at least one Type B-2 portable hand extinguishers. If your boat has a fixed fire extinguishing system approved by the U.S. Coast Guard, one Type B-1 extinguisher is required.

Boats longer than 16 feet and shorter than 26 feet: At least one portable hand Type B-I fire extinguisher.

All fire extinguishers should be mounted in a readily accessible location away from the engine compartment. Everyone on board should know where the fire extinguishers are and how to operate them.

If your fire extinguisher has a charge indicator gauge, cold or hot weather may affect the gauge reading. Consult the instruction manual supplied with the fire extinguisher to determine the accuracy of the gauge.

Visual Distress Signals

The U.S. Coast Guard requires all boats operating on U.S. coastal waters have visual distress signal equipment on board. In general, coastal waters include all waters except rivers, streams, and inland lakes. The Great Lakes are considered coastal waters as is a river mouth more than two miles wide. Boats owned in the United States and operating on the high seas must also carry visual distress signal equipment.

Visual distress equipment must be in serviceable condition and stowed in a readily accessible location. Equipment having a date showing useful service life must be within the specified usage date shown. Both pyrotechnic and non-pyrotechnic equipment must be U.S. Coast Guard approved.

Pyrotechnic U.S. Coast Guard approved visual distress signals and associated equipment include:

- Red flares, hand held or aerial
- Orange smoke, hand held or floating
- Launchers for aerial red meteors or parachute flares

Non-pyrotechnic equipment includes an orange distress flag and an S-O-S electric distress light.

No single signaling device is ideal under all conditions for all purposes. Consider carrying various types of equipment. Careful selection and proper stowage of visual distress equipment are very important. If young children are frequently aboard, you should select devices with packages which children, but not adults, will find difficult to open.

Sound Signaling Device

Your Robalo boat must have a device that can produce a sound signal when conditions require. For boats over 26 feet, the device must be able to produce a two-second blast which can be heard a mile away. For boats less than 26 feet, it must be able to produce a two-second blast which can be heard one-half mile away. It can be a hand, mouth or power operated horn or whistle. Refer to the U.S. Coast Guard's publication "Navigational Rules, International-Inland" for details about the appropriate signals.

RUNNING AND NAVIGATION LIGHTS

Your boat must have running and navigation lights for safe operation after dark. Observe all navigation rules for meeting and passing. Do not run at high speeds during night operation. Always use common sense and good judgment.

SAFETY AFLOAT

Once your boat is launched and your excursion is underway, you need to be aware of your surroundings and how they may affect your safety and that of your passengers. There is no substitute for good judgment and common sense.

Weather

Storms rarely appear without advance notice. Check the weather forecast before you begin a day of boating. Be aware, however, that weather conditions can change rapidly. If you have a marine radio, listen to the weather reports issued by the U.S. Coast Guard and others. If you have a portable radio, keep it tuned to a station broadcasting frequent weather reports. Many boating clubs fly weather signals. Learn to recognize these signals and listen to your local forecasts before leaving port.

Your surroundings can also be a good indicator of changing weather conditions. Watch for changes in wind direction or cloud formations. There is no substitute for a good understanding of weather conditions and what to do when the weather takes a turn for the worse.

Fog

Fog is a result of either warm-surface or cold-surface conditions. You can judge the likelihood of fog formation by periodically measuring the air temperature and dew point temperature. If the difference between these two temperatures is small, fog is likely to develop. Remember the following guidelines:

- Turn on running lights.
- Unless your boat is well equipped with charts, head for shore at the first sign of fog and wait until conditions improve. If you have charts on board, take bearings as fog sets in, mark your position, and continue to log your course and speed.
- Make sure all persons on board have put on their personal floatation devices.

- If your boat has sounding equipment, take soundings regularly and match them with depths shown on your charts.
- Station a person forward in the boat as a lookout.
- Reduce your speed. From time to time, stop engine(s) and listen for other fog signals.
- Sound the horn or fog bell intermittently to warn others.
- If there is any doubt in continuing your excursion, anchor. Listen for other fog signals while continuing to sound your fog horn or bell.

Storms

The present and forecasted weather conditions are a primary consideration, and the possibility of storms should always be a concern. If storms are a possibility, keep a watch on the horizon, especially to the west, for approaching storms. Monitor the weather forecast on a marine channel or local weather station. The best possible situation is to return to a safe port if time allows.

Other steps to follow to weather the storm include:

- Close and secure port holes. Stow all loose gear below deck and tie down any gear on deck.
- Reduce speed as the seas build. Make sure all persons on board have put on their personal floatation devices.
- Trail a sea anchor from the bow. If you do not have a sea anchor aboard, use a canvas bucket, tackle box, or other object that will work like a sea anchor.
- Radar reflectors (if installed on your boat) should be 18 inches diagonally. They should be placed as far above waterline as possible. Otherwise, a boat with radar may have trouble "seeing" your boat.

Man Overboard

Should someone in the boat fall overboard:

- Act quickly—treat every situation as an emergency.
- Move throttle to idle position and yell "Man Overboard".
- Immediately throw a Type IV PFD to the person in the water.
- Have someone in the boat assume responsibility for watching the person in the water and keep them in sight while the boat maneuvers back to them.
- Approach the person into the wind and waves. When alongside, put the engine in neutral and throw them a Type IV PFD with a line attached or extend an oar or boat hook.

Fire

Important: A fire aboard your boat is a serious emergency. You must act immediately!

Every boater should develop a fire response plan to determine what kind of fire (fuel, electrical, etc.) might break out, where it might break out, and the best way to react. Having a plan and assigning responsibilities to others results in quicker decisions and quicker reactions.

Important: Everyone on board should know where fire extinguishers are and how to operate them.

Any fire requires stopping the engine(s) immediately. Then:

- Do not open the hatch to the rigging compartment! The fire will flare up if the fresh air supply increases suddenly.
- Keep the fire downwind if possible. If the fire is aft, head into the wind.

- Have all persons on board put on their personal floatation devices.

- If you can get at the fire, aim the fire extinguisher at the base of the flames and use a sweeping action to put out the fire.

- If the fire gets out of control, make a distress signal, and call for help on the radio.

Deciding whether to stay with the boat or abandon ship will be difficult. If the decision is to abandon ship, all persons on board should jump overboard and swim a safe distance away from the burning boat.

Guidelines for Fire Prevention

- Check the bilge for fuel leaks
- Check cleaning products for flammability
- Ventilate when cleaning or painting
- Disconnect electrical system from power source when performing any type of maintenance

⚠ WARNING

WARNING: Smoking, poor maintenance, or carelessness when refueling can cause hazardous conditions. Always follow proper refueling procedures for your boat.

- Use extra caution when using exposed flame around urethane foam
- Extinguish smoking materials carefully
- Ensure ventilation systems are not obstructed
- Use only approved marine cooking and heating systems
- Open flames demand constant attention
- Keep flammable materials in approved containers
- Replace circuit breaker fuse with one of the same amperage
- Electrical appliances must be within rated amperage of boat circuits
- A qualified marine electrician should service the electrical system

Flooding, Swamping or Capsized Boat

Flooding or swamping is usually caused by the actions of an inattentive boat operator, or by hazardous weather or water conditions. To prevent boat flooding:

- Install drain plug before launching.
- Ensure proper bilge pump operation.
- Do not overload boat.
- Adjust boat speed and trim to match sea and weather conditions.
- Close all cabin hatches, doors, etc. while underway to prevent flooding due to heavy seas or rain. Ensure proper ventilation to avoid carbon monoxide poisoning. See carbon monoxide hazard information later in this chapter.
- When only using one anchor, it should be attached to the bow of the boat.
- When slowing down or moving in reverse do not allow wake or following seas to flood cockpit.

If your boat becomes swamped or capsizes, put on a PFD immediately and set off a distress signal. Chances are good that a capsized boat will stay afloat. For this reason, stay with the boat. Do not leave the boat or try to swim to shore except under extreme conditions. A capsized boat is easier to see than a swimmer, and the shore may be farther away than it appears.

More often than not, boats sink while docked. Any number of factors may contribute to these sinkings. There may have been a mechanical failure such as a failed bilge pump or an electrical problem such as a dead battery or tripped circuit breaker. Check your boat regularly if it is docked for an extended period of time to make sure everything is in order.

Hypothermia

If a person falls overboard, hypothermia may be an immediate concern. Hypothermia means a person's body loses heat to the water faster than the body can replace it. If not rescued, the person will become exhausted or likely drown. In general, the colder the water, the shorter the time for survival. PFDs will increase survival time because they provide insulation.

Water Temperature (°F)	Exhaustion Unconsciousness	Expected Time of Survival
32.5	Under 15 min	Under 15-45 min
32.5-40	15-30 min	30-90 min
40-50	30-60 min	1-3 hr
50-60	1-2 hr	1-6 hr
60-70	2-7 hr	2-40 hr
70-80	3-12 hr	3 hr - Indefinite
Over 80	Indefinite	Indefinite

Collision

If a serious collision occurs, first check the persons on board for injuries. then inspect the boat to determine the extent of damage.

- Prepare to help the other craft unless it places your passengers or boat in danger.
- If the bow of the other boat penetrated your boat's hull, prepare to plug the fracture once the boats are separated.
- Shore up the hole inside your boat with a spare life jacket or cushion.
- While plugging the hole, shift weight to get the hole above the water level.
- If your boat is in danger of sinking, have all persons put on their personal floatation devices.
- If your boat has a radio, contact the U.S. Coast Guard or other rescue authorities immediately (VHF channel 16 or 22 CB radio).

Running Aground

If you run aground check everyone for injury and inspect damage to the boat and propeller(s). If possible, shift weight of passengers or gear to heel the boat while reversing engine(s). If towing becomes necessary, do not attach tow line to deck cleats. These are not designed to take full load of the boat. Robalo recommends using a commercial towing service.

Carbon Monoxide Hazard During Operation

Carbon monoxide (CO) in the engine exhaust is a poisonous gas which is odorless, colorless, and heavier than air. Direct prolonged exposure can result in carbon monoxide poisoning which can be harmful and may be fatal.

WARNING

WARNING: When towing another boat or having your boat towed, make sure the tow line is fastened securely to the bow or transom towing eyes. Never attach tow line to deck cleat or anchor windlass. Cleat or windlass may pull free from deck and cause serious personal injury or property damage.

DANGER

DANGER: Exhaust fumes from engines contain carbon monoxide. Boats with canvas deployed are more likely to collect exhaust fumes. Avoid brain damage or death from carbon monoxide. Keep cockpit and cabin areas well ventilated. Signs of exposure include nausea, dizziness, and drowsiness.

Indications of excessive exposure to carbon monoxide concentrations may include nausea, dizziness and drowsiness. Carbon monoxide poisoning requires the operator's special and immediate attention! To prevent excess exposure and reduce the possibility of carbon monoxide accumulation in the cabin of the boat, ensure adequate ventilation by opening cabin hatches, cabin doors, cabin windows, and side windshield vents to increase air movement.

Some Robalo models are equipped with a CO detector. Follow the operating instructions supplied with the CO detector and test the unit to verify that it is functioning properly every time you use your boat. Refer to the information provided by the manufacturer in your owner's packet to determine replacement interval for your CO detector.

The following illustrations show how carbon monoxide can possibly accumulate in your boat while at the dock or underway. Become familiar with these examples and their precautions to prevent dangerous accidents from occurring on your boat.

⚠ DANGER

DANGER: Blocked hull exhaust outlets near a pier, dock, sea wall bulkhead or any other means can cause excessive accumulation of poisonous carbon monoxide gas within the cabin areas. Make sure hull exhaust outlets are not blocked. (Figure 2.1)

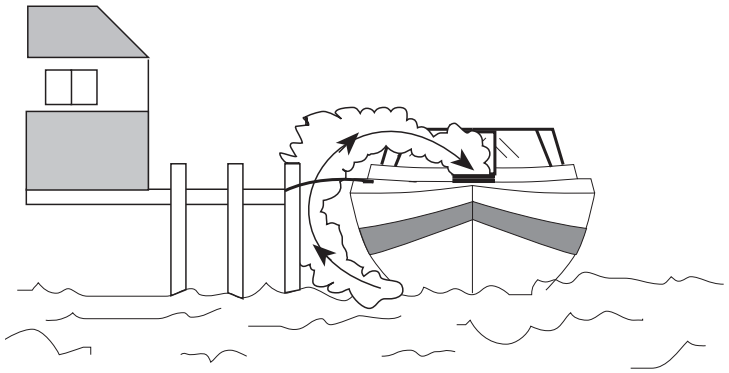

Figure 2.1 Running engine or generator in confined areas

⚠ DANGER

DANGER: Generator or hull exhaust from other vessels alongside your boat, while docked or anchored, can emit carbon monoxide and cause excessive accumulation within the cabin and cockpit areas. Be alert for generator exhaust from other vessels alongside. (Figure 2.2)

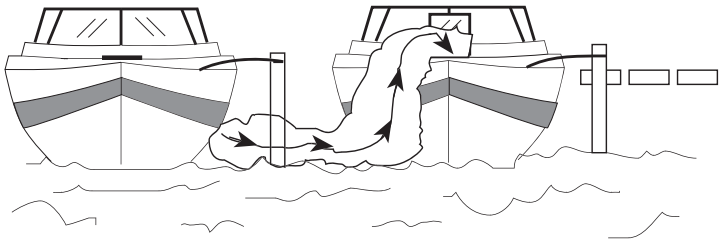

Figure 2.2 Exhaust Fumes from Vessel Alongside

⚠ DANGER

DANGER: Engine exhaust from your boat while underway can cause excessive accumulation of carbon monoxide within the cabin and cockpit areas when using protective weather coverings. Provide adequate ventilation when the canvas top, side curtains, and/or back curtains are closed. (Figure 2.3)

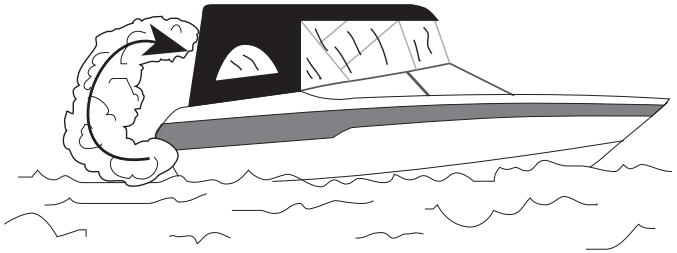

Figure 2.3 Exhaust Accumulation While Canvas is in Place

⚠ DANGER

DANGER: Engine exhaust from your boat while underway can cause excessive accumulation of carbon monoxide within the cabin and cockpit areas when operating at slow speed or stopped in the water. Tail wind can increase accumulation (force of wind entering from aft section of boat). Provide adequate ventilation or slightly increase speed if possible. (figure 2.4)

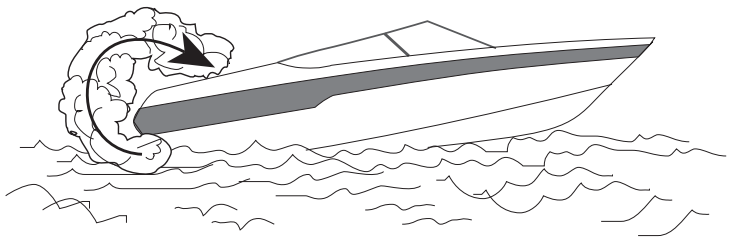

Figure 2.4 Exhaust Accumulation due to High Bow Angle or Slow Speed

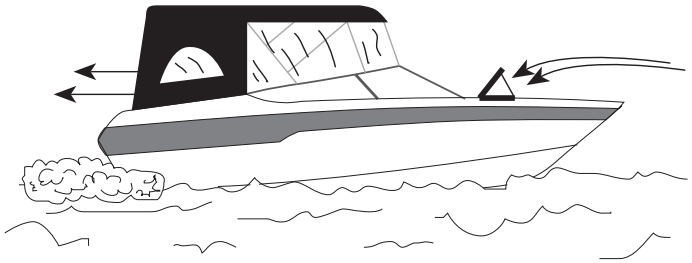

Figure 2.5 Desired Ventilation Through the Boat

Navigational Aids Chart

Contains information about various signals, buoys, and warnings.

Robalo recommends you participate in a safe boating course to learn more about navigating your boat safely.

Fuel System

Everyone who owns or operates a boat must practice fire safety. Each year, boat fires and explosions injure hundreds of individuals and cause millions of dollars in property damage. Many of these accidents can be prevented.

⚠ WARNING

WARNING: Avoid damage to your fuel system. Do not use fuel or additives containing more than 10% alcohol by volume (methanol or ethanol). Damage and loss of warranty may result.

Be alert for damage to your boat's fuel system. Over time, fuel fittings and fuel hoses wear out. Inspect these fittings and hoses regularly, especially near the engine where engine heat and vibration can accelerate deterioration.

What to do

1. Schedule regular engine and exhaust system maintenance inspections by experienced and trained technicians.

2. Inspect fuel systems annually, particularly hoses, connections and tank surfaces. Use only USCG-approved fuel hoses.

3. Before fueling, shut down engines and auxiliary equipment and all electrical equipment. Also close all hatches and doors on board.

4. Do not allow equipment or gear to contact fuel-system components. Monitor side storage areas where fill and vent hoses are often located.

5. Do not store portable fuel tanks in enclosed areas, including the engine room compartment (even though it may be "ventilated").

6. If your boat is equipped with a ventilation system, ensure that all blowers and hoses are operational and intact. Verify good airflow at the vent located on the boat.

7. Take a boating safety course and learn the correct type and use of a fire extinguisher aboard a boat.

Each Trip

- Before starting the engine "sniff" your bilges. Getting down on your hand and knees and using your nose is the best fuel/vapor detector.

- Operate the bilge blower for AT LEAST FOUR MINUTES before starting an inboard or sterndrive engine. If you still smell fumes, try to locate the source and make repairs before starting the engine.

- Make sure all passengers know where to find your fire extinguishers and how to operate them.

- Before refueling, close all hatches, ports and other openings; shut off engines, motors, pumps and blowers; and DO NOT SMOKE. Fill all portable tanks on the dock.

- After refueling, wipe up or wash off any excess or spilled fuel; open all hatches and ports; and let the boat air out. "Sniff" your bilges. Operate the bilge blower for AT LEAST FOUR MINUTES before starting an inboard or sterndrive engine.

- On a boat with portable fuel tanks, make sure the vents can be closed and the tanks have a vapor-tight, leak-proof cap. The vent on a portable tank should be open when the motor is running. When the portable tank is not in use, the vent and the cap should be tightly closed.

Important: Do not operate your boat until the source of a fuel leak is identified. Have a qualified service technician correct the condition. NEVER USE AN OPEN FLAME TO INSPECT FOR LEAKS.

At Least Annually:

(Performed by a qualified marine technician)

- Replace fuel system components if any evidence of cracking, corrosion or deterioration is found.

- Inspect fuel tanks annually. Pay particular attention to bottom surfaces that may have contacted bilge water. Also, check to see if any part of the tank is corroded or damaged from rubbing and abrasion. Permanently installed fuel tanks must be vented to the atmosphere outside the boat. Closed compartments that contain fuel tanks and engines or non-ignition protected electri- cal components must be ventilated.

- Be sure the fill pipe is securely mounted, grounded and located where spilled fuel is directed overboard. Dry and cracked or soft and mushy fuel fill hoses should be replaced immediately.

- If your boat is equipped with bilge blowers, ensure they are working properly.

- Ensure heating and cooking appliances on board are secured and operate properly. Refer to the appliance owner's manual for guidance on inspecting for leaks in valves and connections. NEVER USE A MATCH to inspect for leaks.

- Ensure flammable items are stowed safely and cannot contact cooking or heating appliances or hot engine parts.

- Ensure fire extinguishers are USCG-approved and in good working order (i.e., gauges register and nozzles are clear).
- Repair all bare wires and loose electrical connections that might cause a short in your boat's electrical system and start a fire.
- Do not store disposable propane cylinders or charcoal lighting fluid on board the boat.
- When replacing starters, generators or other electrical equipment use only ignition-protected parts. Do not use automotive parts.

WATER SPORTS

⚠WARNING

WARNING: Death or serious poisoning can result from exposure to carbon monoxide from engine exhaust. Turn off gasoline-powered generators that exhaust at or near the water level when the swim platform on the stern is in use. Swimmers should not enter the cavity beneath the swim platform.

Water skiing and other water sports, such as kneeboarding and riding on inflatable towable devices, require an increased safety awareness by all the people involved.

Important: Remember that three people — not two — are required for safe water skiing: the boat operator, the skier, and an observer on the boat facing the skier. The observer relays signals from the skier to the operator. The operator can therefore give full attention to the operation of the boat and the waters ahead.

Figure 2.6 shows a set of hand signals recommended by the American Water Ski Association (AWSA). The skier, the observer, and the boat operator should know and understand these 7 simple signals.

Following these guidelines helps make water skiing a safe and enjoyable experience:

1. Water ski only in safe areas away from other boats and swimmers, out of channels, and in water free of underwater obstructions.
2. Make sure anyone who water skis is a competent swimmer.

1. Thumb Up: Speed up the boat.
2. Thumb Down: Slow down the boat.
3. Cut Motor/Stop: Immediately stop boat. Slashing motion over neck (also used by driver or observer).
4. Turn: Turn the boat (also used by driver). Circle motion—arms overhead. Then point in desired direction.
5. Return to Dock: Pat on the head.
6. OK: Speed and boat path OK. Or, signals understood.
7. I'm OK: Skier OK after falling.

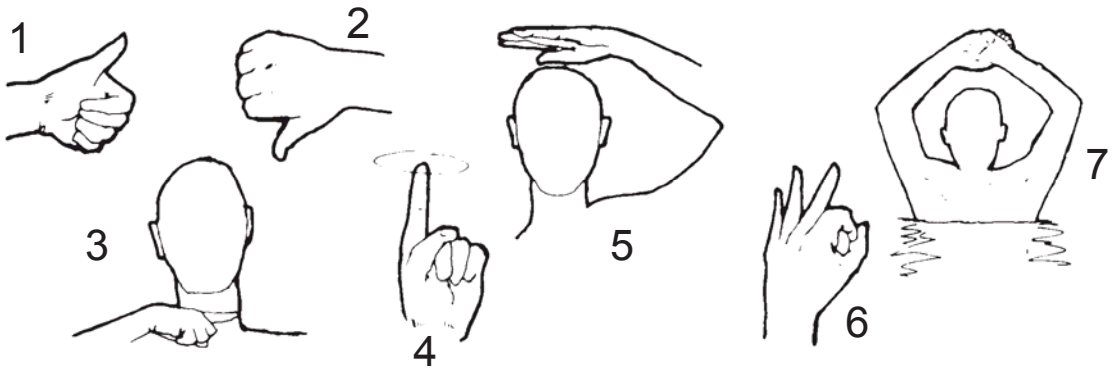

Figure 2.6 AWSA Water Skiing Signals

3. Be sure the skier is wearing a proper flotation device. A properly designed ski vest will keep a stunned or unconscious person afloat.

4. Approach a skier in the water from the lee side, and be certain to stop your motor before coming close to the skier.

5. Give immediate attention to a fallen skier. He or she is vulnerable in the water alone and is difficult to see by other boaters.

For more information about water skiing, Please contact the American Water Ski Association, 799 Overlook Drive, Winter Haven, Florida 33884 (1-800-533-2972) or www.usawaterski.org.

WARNING

WARNING: Serious injury may result from para-sailing, kiting, or similar water sports. Robalo Boats are not designed for towing para-sails, kites, or any other device designed to become airborne when towed behind a boat.

Additional Equipment

You should consider having additional equipment on board to help make your boating experience safer and more enjoyable. Some examples include the following:

- Anchor and line
- Boat hook
- Bucket & sponge
- Commonly used spare parts
- Compass, navigation charts
- Distress signal kit
- Docking and towing lines
- Engine and accessory manuals
- Extra keys
- Fenders
- First aid kit
- Flashlight & extra batteries
- Fuses
- Manually operated bilge pump
- Owner's manual
- Paddle
- Replacement light bulbs
- Ship-to-shore radio
- Spare fuel and oil
- Spare propeller with fastening hardware
- Spare set of spark plugs and ignition parts
- Tool kit

NAVIGATIONAL AIDS CHART

REMEMBER THESE RULES

1. **OVERTAKING - PASSING: Boat being passed has the right-of-way. KEEP CLEAR.**
2. **MEETING HEAD ON: Keep to the right.**
3. **CROSSING: Boat on right has the right-of-way. Slow down and permit boat to pass.**

PORT

Yield right-of-way to boats in your DANGER ZONE!

STARBOARD

DANGER ZONE (Dead ahead to 2 points abaft your starboard beam)

WHISTLE SIGNALS

ONE LONG BLAST: Warning signal (Coming out of slip)
ONE SHORT BLAST: Pass on my port side
TWO SHORT BLASTS: Pass on my starboard side
THREE SHORT BLASTS: Engine(s) in reverse
FOUR OR MORE BLASTS: Danger signal

BRIDGE SIGNALS

SOUND
VESSEL: Open
BRIDGE: OK
No
VESSEL: Replies:
RADIO: VHF CH. 13

VISUAL
VESSEL: Open
BRIDGE: OK
No

DAY (Flag) NIGHT (Lights)
or
Same
Same

STORM WARNINGS

RED FLAG Small craft (winds to 33 knots)

2 RED FLAGS Gale (winds up to 47 knots)

SQUARE RED FLAG BLACK BOX (Storm)

2 SQUARE RED FLAGS BLACK BOX (Hurricane)

LATERAL AIDS AS SEEN ENTERING FROM SEAWARD

PORT SIDE

ODD NUMBERED AIDS

GREEN LIGHT ONLY
FLASHING
OCCULTING
QUICK FLASHING
ISOPHASE

"9"
G 4sec
LIGHTED BUOY

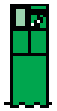

"7"
CAN

SG

DAYMARK
G
"1"

SAFE WATER

MID-CHANNELS OR FAIRWAYS NO NUMBERS-MAY BE LETTERED

WHITE LIGHT ONLY MORSE CODE
Mo(A)

SPHERICAL
RW
SP "G"

RW
"A"
MR

LIGHTED
AND OR SOUND
"N"
(A)

PREFERRED CHANNEL
NO NUMBERS-MAY BE LETTERED
COMPOSITE GROUP FLASHING (2 + 1)

STARBOARD SIDE

EVEN NUMBERED AIDS

RED LIGHT ONLY
FLASHING
OCCULTING
QUICK FLASHING
ISOPHASE

4sec
LIGHTED BUOY

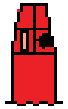

R
N "6"
NUN

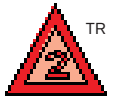

TR
DAYMARK
R
"2"

IGHT ONLY

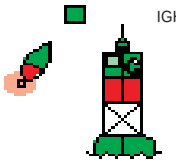

PREFERRED CHANNEL TO STARBOARD TOPMOST BAND GREEN

GR
C "L"
CAN

JG

GR
"A"

LIGHTED

RED LIGHT ONLY

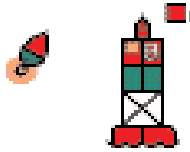

PREFERRED CHANNEL TO PORT TOPMOST BAND RED

RG
"W"
NUN

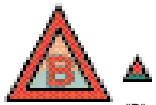

"B"

United States Coast Guard Website: www.uscg.mil

SYSTEMS

ELECTRICAL SYSTEMS

Your Robalo boat has a 12 volt, direct current (DC) battery system.

Safety Precautions

Follow these precautions when working with or on electrical systems or electrically powered equipment:

1. Shut off power supply before starting work.
2. Use insulated mats to prevent accidental grounding.
3. Make sure clothing is dry. Keep skin dry.
4. Remove all metal jewelry.

12 Volt DC Power

Batteries are the source of power for the 12 volt DC (direct current) electrical system. The batteries are charged through the engine-driven alternator. The voltmeter on the instrument panel in the dash shows the battery charging rate when the engine is running.

The negative terminal of each battery is connected to the grounding studs of the main engine(s). This type of negative ground system is the approved system for marine DC electrical systems. If you add additional equipment to your boat it must be adaptable to the negative ground system.

NOTE: Power feeds for accessory equipment must NOT be taken from the voltmeter terminals. A fuse block near the helm has been provided with additional accessory hookups. Consult your Robalo dealer for additional DC power needs on your boat.

CAUTION

CAUTION: When adding electrical equipment, be careful not to overload the fuse block.

Note: The appropriate fuse or circuit breaker must be used. Consult a qualified technician for proper fuse size.

WARNING

WARNING: Considerable care has been taken to design a safe electrical system to protect you from hazardous shocks. Always have a qualified technician make any modifications to the system.

DANGER

DANGER: Do Not disconnect or reconnect battery cables if gasoline fumes are present!

Battery

Note: A dual battery system is standard equipment on some models.

The battery installed in your boat by your Robalo dealer supplies your boat with DC current for lights, engine starting, and accessories. When the engine is running, the alternator supplies the power needed to keep the batteries charged. Lights and accessories draw power from the batteries.

Battery Isolator System

The models with a single engine and two batteries are standard with a battery isolator system to maintain a charge on the house battery while the engine is in operation. Models with twin engines and three batteries are standard with a battery isolator system to maintain a charge on the house battery while the starboard engine is in operations. The isolator for Yamaha powered boats is in the engine and for Honda powered boats, it is in the aft bilge.

Battery Selector Switch

All models have a battery selector switch as standard equipment. If your boat has a battery selector switch, you will find it in the aft rigging area or in the console.

Single Selector Switch with Two Batteries

A selector switch with two batteries is standard on some models. This battery selector switch has four positions:

OFF Power supplied to automatic bilge pump, CO detector (if so equipped), and stereo memory.

1. Use only Number 1 battery

ALL Use Number 1 and Number 2 batteries

2. Use only Number 2 battery

Recommended settings are as follows:

1. When boat is not in use or power is not required, turn the switch to OFF. The only power supplied at this setting is the automatic bilge pumps, carbon monoxide detector (if equipped), stereo memory, and optional corrosion protection system.

2. To start the engine, place switch in Number 1 position. With this setting, power will now be supplied to your boat from the Number 1 battery. This will allow the engine alternator to charge both batteries.

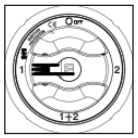

3. For cabin power with engine off, place the switch in the Number 2 position. Power will now be supplied to your boat from the Number 2 battery.

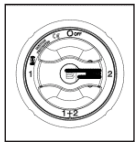

Note: Robalo does not recommend leaving the switch in the ALL position when the engine is off. This will drain both batteries and you will not have a starting battery.

4. If one battery is low, you still have the option of starting the engine from the other battery.

Example 1: If the Number 1 battery is low, place the switch in the Number 2 position. Then start the engine. Place switch in Number 1 position. This will allow the engine alternator to recharge both batteries.

Example 2: If the Number 2 battery is low, place the switch in the Number 1 position. Then start the engine. This will allow the engine alternator to recharge both batteries.

Note: When recharging a low battery, be sure to run the engine for a sufficient amount of time to fully recharge the battery.

Note: Robalo does not recommend any other settings than mentioned because of possible damage to batteries or engine alternator.

Four Selector Switches with Three Batteries and Twin Engines

Each of the four battery switches have two positions:

All Switches Off
Power supplied to automatic bilge pump, CO detector , high water alarm, stereo memory and mercathode system..

STBD Switch ON
Use only STDB (Main Engine) battery.

PORT Switch ON
Use only PORT (Main Engine) battery.

HOUSE Switch ON
Use only HOUSE battery(s).

STBD, PORT, and HOUSE Switches ON
Use STDB (Main Engine) and PORT (Main Engine) batteries. Emergency parallel switch OFF.

Recommended settings are as follows:

1. All Switches Off
When boat is not in use or power is not required, turn all switches to OFF. The only power supplied at this setting is the automatic bilge pumps, carbon monoxide detector, stereo memory, high water alarm and mercathode system.

2. STBD Switch ON
To start the engine, place switch in ON position. With this setting, power will now be supplied to your boat from the STBD (Main Engine) battery.

3. PORT Switch ON
To start the engine, place switch in ON position. With this setting, power will now be supplied to your boat from the PORT (Main Engine) battery.

4. HOUSE Switch ON
For cabin or accessory power, place the switch in the ON position. Power will now be supplied to your boat from the HOUSE battery.

Note: Robalo does not recommend leaving all three switches on when the engine is off. This will drain both batteries and you will not have a starting battery.

5. STBD, PORT, and PARALLEL Switches ON
If the batteries are low, you still have the option of starting the engines by combining the output from both batteries.

Note: When recharging a low battery, be sure to run the engine for a sufficient amount of time to fully recharge the battery.

Note: Robalo does not recommend any other settings than mentioned because of possible damage to batteries or engine alternator.

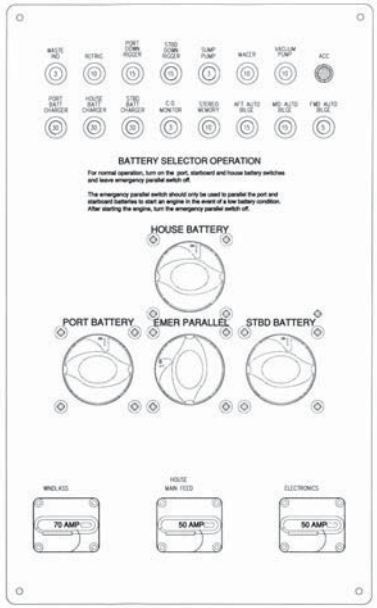

Figure 3.1 Four Selector Switches with Three Batteries and Twin Engines

Three Selector Switches with Two Batteries and Twin Engines

Each of the three battery switches have two positions:

All Switches Off
Power supplied to automatic bilge pump, CO detector (if so equipped), and stereo memory.

STBD Switch ON
Use only STBD (Main Engine) battery.

PORT Switch ON
Use only PORT (Main Engine/House) battery.

STBD, PORT, and PARALLEL Switches ON
Use only STBD (Main Engine) and PORT (Main Engine/House) batteries.

Recommended settings are as follows:

1. All Switches Off
When boat is not in use or power is not required, turn all switches to OFF. The only power supplied at this setting is the automatic bilge pumps, carbon monoxide detector (if equipped), and stereo memory.

2. STBD Switch ON
To start the engine, place switch in ON position. With this setting, power will now be supplied to your boat from the STBD (Main /Engine) battery. This will allow the engine alter- nator to charge only the starboard main battery.

3. PORT Switch ON
To start the engine, place switch in ON position. With this setting, power will now be supplied to your boat from the PORT (Main Engine/House) battery. Having this switch in the ON position will also supply cabin or accessory power. This will allow the engine alternator to charge only the port main battery.

Note: Robalo does not recommend leaving all three switches on when the engine is off. This will drain both batteries and you will not have a starting battery.

4. STBD, PORT, and PARALLEL Switches ON
If the batteries are low, you still have the option of starting the engines by combining the output from both batteries. This position is also used to charge both the main and house bat- teries from one engine if the boat is not equipped with a battery isolator.

Note: When recharging a low battery, be sure to run the engine for a sufficient amount of time to fully recharge the battery.

Note: Robalo does not recommend any other settings than mentioned because of possible damage to batteries or engine alternator.

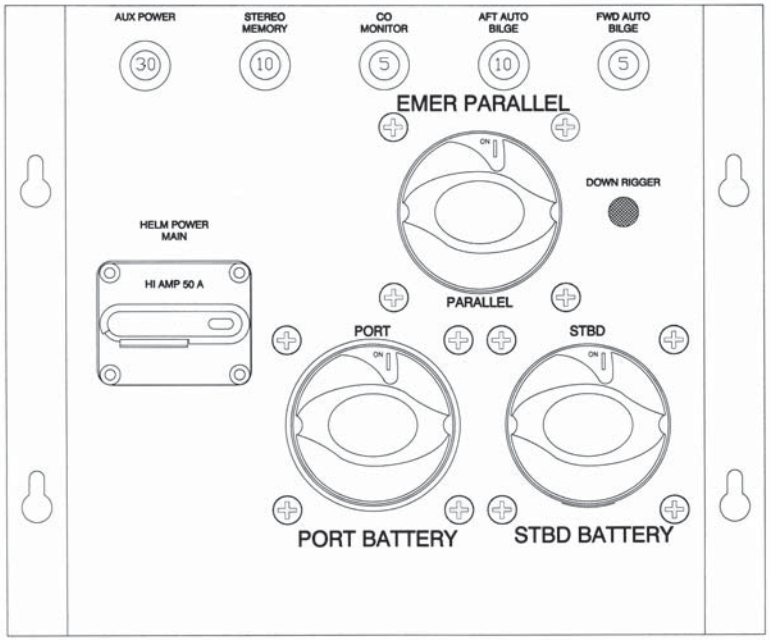

Figure 3.2 Three Selector Switches with Two Batteries and Twin Engines

Three Selector Switches with Two Batteries and Single Engine

Each of the three battery switches have two positions:

All Switches Off
Power supplied to automatic bilge pump, CO detector (if so equipped), and stereo memory.

STBD Switch ON
Use only STBD (Main Engine) battery.

PORT Switch ON
Use only PORT (House) battery.

STBD, PORT, and PARALLEL Switches ON
Use STBD (Main Engine) and PORT (House) batteries in combination.

Recommended settings are as follows:

1. All Switches Off
When boat is not in use or power is not required, turn all switches to OFF. The only power supplied at this setting is the automatic bilge pumps, carbon monoxide detector (if equipped), and stereo memory.

2. STBD Switch ON
To start the engine, place switch in ON position. With this setting, power will now be supplied to your boat from the STBD (Main Engine) battery. This will allow the engine alternator to charge on the main battery.

3. PORT Switch ON
For cabin or accessory power, place the switch in the ON position. Power will now be supplied to your boat from the House battery.

Note: Robalo does not recommend leaving all three switches on when the engine is off. This will drain both batteries and you will not have a starting battery.

4. STBD, PORT, and PARALLEL Switches ON
If both batteries are low, you still have the option of starting the engine by combining the output from both batteries. This position is also used to charge both the main and house batteries if the boat is not equipped with a battery isolator.

Note: When recharging a low battery, be sure to run the engine for a sufficient amount of time to fully recharge the battery.

Note: Robalo does not recommend any other settings than mentioned because of possible damage to batteries or engine alternator.

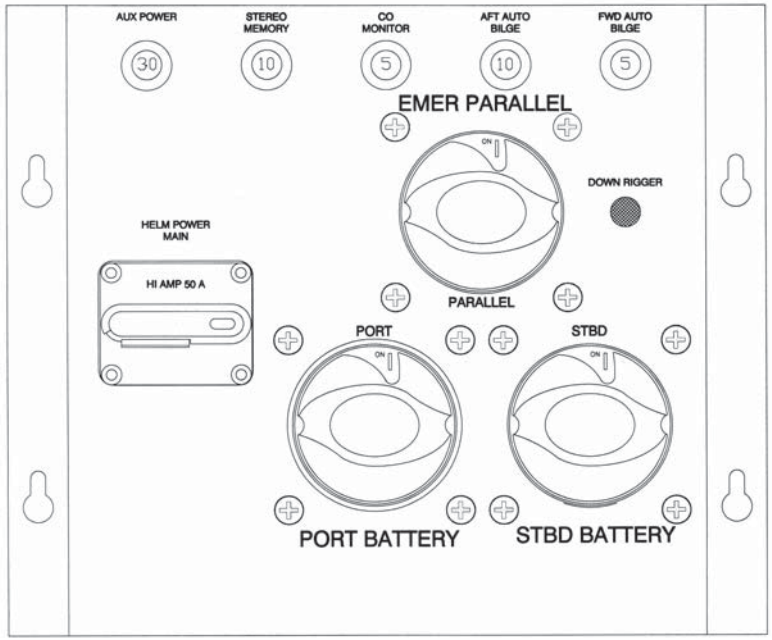

Figure 3.3 Three Selector Switches with Two Batteries and Single Engine

AC/DC Converter and Battery Charger

Your Robalo boat may have an optional or standard battery charging system which may operate off of an extension cord or from the 120 or 220 volt AC power from shore power system. Turn the charger on at the main cabin electrical panel whenever your boat is connected to

shore power to keep batteries fully charged. The AC-to-DC converting and charging system is fully automatic and permanently wired into the 12 volt DC system. If the monitored battery level drops under the full charge range, the charger automatically turns ON and restores the battery to FULL charge status. If the battery is deeply discharged, the charger will deliver full output. Output automatically decreases as the battery is charged. If the battery is fully charged, the charger provides a trickle charge as needed.

Before you connect an extension cord to the battery charger 120 volt power supply, secure the extension cord to the boat. Connecting the cord to the boat first will prevent dropping a "hot" cord into the water. When you leave the dock remove the cord from the dockside power source first. If you have any questions, contact your Robalo dealer.

120 or 220 Volt AC Power

The alternating current (AC) electrical system operates off a standard 30 amp 120 or 220 volt, 60 or 50 cycle shore power system. The main distribution panel is in the cabin area.

Shore Power

Your Robalo boat has a single male receptacle outside on the deck for shore power connection. When not in use, a water-resistant cover protects the receptacle.

CAUTION

CAUTION: To prevent damage to electrical system, never operate shore power system at low voltage.

Before you connect your boat to shore power, turn off the main cabin circuit breakers. Attach the shore power cord to the boat first and turn clockwise to lock. Thread the locking ring on the inlet to secure the cord. Connecting the cord to the boat first will prevent dropping a "hot" cord into the water. (When you leave the dock, remove the cord from the dockside shore outlet first.) If you have any questions, contact your Robalo dealer.

Always be sure when using a Y-adapter or connecting two power cords that any connections are clear of water standing on the dock from rain or the pedestal water outlet.

Make sure the dockside shore power breaker is OFF, then plug in the cord. Turn the dockside shore power breaker on. Immediately check the polarity light(s) on the main panel. If the REVERSED POLARITY light on the main cabin panel illuminates, **do not turn on the main cabin breaker.**

Turn off the dockside shore power breaker and disconnect your shore power cord. Inform the marina manager of the problem. If the reverse polarity light does not illuminate, push the test button next to the light. If the light is functioning properly it will illuminate during this test and you are

CAUTION

CAUTION: Electric shock is possible if you turn on main cabin breaker when reversed polarity is present.

now assured that the polarity of your shore power connection is correct. At this point, turn on the main cabin AC circuit breaker(s). You may now use AC powered components on your boat.

Important: Some equipment will not work or may be damaged if polarity is reversed. Damage caused by reversed polarity is not covered under your warranty. Be sure polarity is correct when you connect your boat to shore power.

Shore Power Connection

To connect:
Instructions for models that have shore power connectivity.

- Make sure all shore power cords and adapters are clean and dry before use. If cords are dropped overboard, rinse with fresh water and completely dry, and then check cords by a qualified marine electrician. Keep shore power inlet covers tightly closed when not in use.

- Get permission from the marina before connecting to a dock receptacle and ask if the "polarity" and ground are correct and when they were last checked.
- Make certain there are no swimmers in the water around your slip.
- Shut off each individual breaker, the boat's main AC circuit breaker, and dock breaker before connecting the shore power cord.
- Connect the shore power cord to the boat first, then ensure dockside breaker is OFF, connect the cord to the dock receptacle and turn on the dock breaker.
- Thread the locking ring on the outlet to secure cable and prevent accidental unplugging and turn the dock breaker on the dock to the ON position.
- Check the boat's "polarity" alarm or light (if it has one) on the AC panel as soon as the dock breaker is turned on. If the polarity is incorrect, shut the dock breaker off and disconnect the dock end of the shore power cord immediately. Report the problem to the marina. The marina should contact a qualified electrician to make corrections.
- Turn ON the AC main shore power breaker (If it has one). Individual AC breaker and switches can now be energized.

To Disconnect:

- Shut off each individual breaker first then shut off the boat's main AC circuit breaker.
- Turn off the dock breaker.
- Disconnect the dock end of the shore power cord first.
- Clean and dry the shore power cord. Store it in a dry location on board the boat.

You are now disconnected to shore power

Ground Fault Interrupter Outlet

The ground fault interrupter outlet provides protection against cur- rents which can be dangerous even though they do not overload circuit breakers. These outlets which have a test and reset switch in the middle of the faceplate provide ground fault protection to the head and galley outlets on the boat. If there is a difference of more than 5 milliamperes, a safety switch trips in the outlet and interrupts the circuit. This protects the person who is operating the electrical equipment from serious electric shock or loss of life. The outlet may not eliminate the feeling of an electric shock, but it does open the circuit quickly enough to prevent injury to a person of normal health.

When the outlet's circuit breaker is tripped, you must push the RESET button. Check this outlet periodically by pushing the TEST button. Pushing the TEST button cuts power to the 120 and 220 volt outlets.

Robalo recommends replacing GFCI outlets once a year by a qualified electrician.

General Electrical System Information

Electrical panel and shore power inlet wire connections may possibly loosen over time. Robalo recommends having your dealer check these connections at least annually, or if you are having any electrical system problem. Due to potential electrical shock hazard, do not attempt this service procedure yourself. Your dealer is trained to properly diagnose and correct electrical problems safely.

Lighting

Lighting operates off the 12 volt DC system. Turn lights on or off at the main electrical panel in the cabin or at the light fixture. See your Robalo dealer for information regarding bulb replacement.

Electrolysis and Zinc Anodes

Many boaters are unaware of the problems associated with electrolysis and how to properly address corrosion issues. Electrolysis is a reaction between metal and electrical energy. Electrolysis occurs when electrical current is "leaking" into the water, and can come from a variety of things

such as ship to shore power, sharing electrical wires, old electrical devices in contact with the water, batteries in boats, etc.

Electrolysis can also be caused by "stray currents" due to a fault in an electrical item, even though correctly grounded. Robalo boats that have shore power are equipped with a galvanic isolator which isolates the boat from the dockside electrical system.

Electrolysis/corrosion is a very real issue and expense for any boater, and boat owners must be aware of the proper protection and maintenance. Corrosion will directly affect the performance of your boat within a very short period of time.

It is the boat owner's responsibility to check for and replace damaged parts due to galvanic deterioration. Refer to your Robalo dealer to investigate the source of stray corrosive currents.

Sacrificial anodes are installed on the outdrive and trim tabs to protect underwater hardware on your boat. Metals used in sacrificial anodes are less noble than the copper-based alloys and aluminum used in underwater fittings; therefore, the anodes will deteriorate first and protect the more noble parts. Metals commonly used in sacrificial anodes include aluminum, magnesium and zinc.

The type of metal needed for your boat's sacrificial anodes will depend on your use of the boat. For instance, the type of water where you commonly go boating is a major factor in determining your need. Robalo recommends you consult your dealer and you engine manufacturer's owner's manual to determine the proper metal needed in your sacrificial anodes.

Zinc anodes generally require replacement about once a year, but may need to be replaced every six months in salt water areas. The need to replace anodes more frequently may indicate a stray current problem within the boat or at the slip or mooring. If zinc anodes are not replaced annually, they may not be providing the necessary protection.

Note: Do not paint between the zinc and any metal it touches. Do not paint over the zinc.

When an AC shore power system is connected to the boat, the underwater metal fittings will be connected through the water to grounded metals ashore. The zincs will be consumed as a faster rate unless the marina maintains a protective system to prevent this.

Placing a zinc in the water bonded to the metal outlet box on the dock will reduce zinc loss on the boat. Do not connect this zinc to the boat's ground system.

Important: All electrically operated DC equipment and accessories must be wired so that the ground polarity of each device is the same as that of the battery. Robalo boats have a negative ground system, which is recommended practice throughout the marine industry. All metal items (fuel tanks, underwater hardware) in the boat are connected to the zinc anode by the green bonding wire.

Once a year
(Performed by a qualified marine technician)

Verify the integrity of the boat's entire AC shore power grounding system, including the connection to the DC system negative.

Verify that any galvanic isolators (if installed on your boat) meet current American Boat & Yacht Council (ABYC) standards and are fully functional.

Inspect shore power cords, adapters and boat receptacles for any signs of deterioration, including cord wear, loose connections, signs of sparking or overheating and bent or pitted blades. If there are any such signs, examine, correct, and test the equipment or replace it.

Operate the boat's electrical system at full load (everything on) and check for AC system leakage or voltage between the boat's underwater fittings (bonded system, if equipped) and the shore side AC system ground.

FUEL SYSTEM

The internal fuel system on your Robalo boat meets all current Federal requirements.

Fuel lines, filters, and all other fuel system components should be checked at the start of each season and periodically thereafter, particularly after

any work has been done aboard the boat which might have affected any part of the system. Be certain that all fuel system components are in proper condition and that the entire system is fuel tight. Each fuel tank has amanual shut-off valves on the top of the tank to close off the fuel system in case of leakage or line failure. There is also a fuel valve on the fuel filter to prevent fuel leakage when changing the filter.

The fuel tank is located forward of the engine compartment under the cockpit floor. The fuel tank fill pipe is on the outside deck.

The fuel tank vent allows air to escape as the tank is being filled and helps equalize tank pressure as temperatures change.

Periodically, check the condition of the fuel tank components. Fuel tank fittings are accessible through the inspection plate of the cockpit floor.

Note: The fuel fill cap has a built-in tank ventilation feature. If you should need to replace the cap, see your dealer for the exact cap to ensure proper fuel system operation.

Fuel Recommendations

The quality of the fuel is very important for satisfactory engine performance and long engine life. Fuel should be clean and free of contamination. Your fuel tanks should be kept full of fuel whenever possible. This will reduce the amount of water condensation and reduce the possibility of contamination.

FRESH WATER SYSTEM

Some models have a non-pressurized water system as standard equipment and a pressurized system as optional. The fresh water system provides water from an onboard storage tank.

On some models, the fresh water tank is filled through the fill plate on the side of the deck. The vent allows air to enter and escape as water levels change. Fill the tank only with potable water. Using and refilling the tank frequently keeps drinking water fresh and clean.

Sanitizing the Fresh Water System

Sanitize the fresh water system before you use it the first time, when you recommission your boat after winter storage, or when the system has not been in use for an extended period of time.

Note: Fresh water tank must be empty before beginning sanitizing process. Empty tank if necessary.

⚠CAUTION

CAUTION: Bleach causes eye and skin irritation. Notify all persons on board the fresh water system is being sanitized. Do not allow anyone to drink water from fresh water system while it is being sanitized. In case of body contact, follow directions on bleach container.

TO SANITIZE THE TANK:

1. Pour 10 ounces of household bleach for every 10 gallons of capacity into the water tank.
2. Fill the water tank with fresh clean water.
3. Manually pump water throughout system.
4. When a steady stream of water is coming from the faucet, all air is out of the system. Turn switch OFF after closing faucets.
5. Allow treated water solution to remain in tank for 3 to 4 hours.
6. Turn on water pump switch and pump all treated water solution from tank and lines through all faucets.
7. Refill tank with fresh water and turn on pump to thoroughly flush entire system with fresh water after each sanitizing.

Note: If fresh water tastes like chlorine after sanitizing, pour a solution of 1 quart vinegar and 5 gallons of fresh water into the tank and

allow solution to stand in tank for several days. Then drain entire system and flush with fresh water. Fill tank with fresh water.

INITIAL START-UP

1. Fill fresh water system.
2. Manually pump water faucet until water is coming out faucet or if optional pressure water system, turn on water pump breaker.
3. Open galley faucet to allow air to escape.
4. Close faucet when steady flow of water appears.

Optional Water Pump and Filter

Once the water pump switch is ON, the water pump supplies water under pressure to the fresh water system. The filter keeps particles from entering the pump reservoir. Check the filter periodically and clean if necessary. A clogged filter may result in low water pressure to the system.

Before servicing the filter, turn the water system breaker OFF and release pressure on the system by opening all faucets. To clean the filter, remove screen and rinse with clean water. Replace and make sure the O-ring is seated properly when installing the cover.

Note: Refer to the water pump manual for detailed operation and maintenance procedures.

Livewell Pump, Raw Water Pump and Filter

Once the water pump switch is ON, the water pump supplies water under pressure to the raw water system. The filter keeps particles from entering the pump reservoir. Check the filter periodically and clean if necessary. A clogged filter may result in low water pressure to the system.

Before servicing the filter, turn the water system switch OFF. To clean the filter, remove screen and rinse with clean water. Replace and make sure the O-ring is seated properly when installing the cover.

Note: Refer to the water pump manual for detailed operation and maintenance procedures.

MARINE SANITATION DEVICES

Standard and optional sanitation equipment varies with the boat model. These options include a Porta-Potti (Figure 3.4), and a VacuFlush® system with holding tank and optional macerator (Figure 3.5).

The marine sanitation device (MSD), or head, installed on your Robalo boat stores the waste in an onboard holding tank. The preferred method to empty the tank is by using a dockside pump out station designed for sanitary removal of the waste.

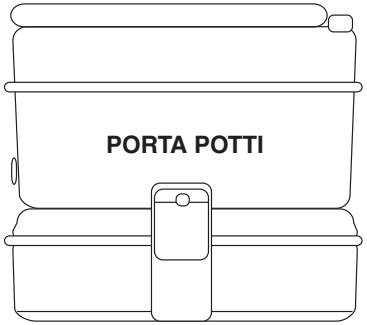

Figure 3.4 Porta-Potti

If you empty the holding tank overboard, the optional macerator grinds waste material into small particles as it empties the holding tank. The only time you will use the macerator is when you empty the holding tank overboard.

Note: See the owner's manual supplied by the manufacturer for safety precautions and for detailed operation, maintenance, and winterizing procedures. The manual is in your owner's packet.

The U.S. Coast Guard has also issued regulations requiring boats to have a sanitation system on board to control pollution. Wastes are to be stored in a holding tank or other device, such as a Porta-Potti, until the device

can be pumped out and disposed of at a shore facility. Discharging this waste overboard is prohibited in most jurisdictions. Check with the Coast Guard regarding regulations in your area.

If your boat is equipped with the Vacuflush® head, your waste system is actuated by a HEAD or TOILET SYSTEM switch in the head. It uses fresh water to minimize odor problems. To add water to the bowl, raise flush lever until desired water level is reached. Add deodorizer before using the head. The pedal at the base of the head evacuates waste and a vacuum forces the waste to the holding tank.

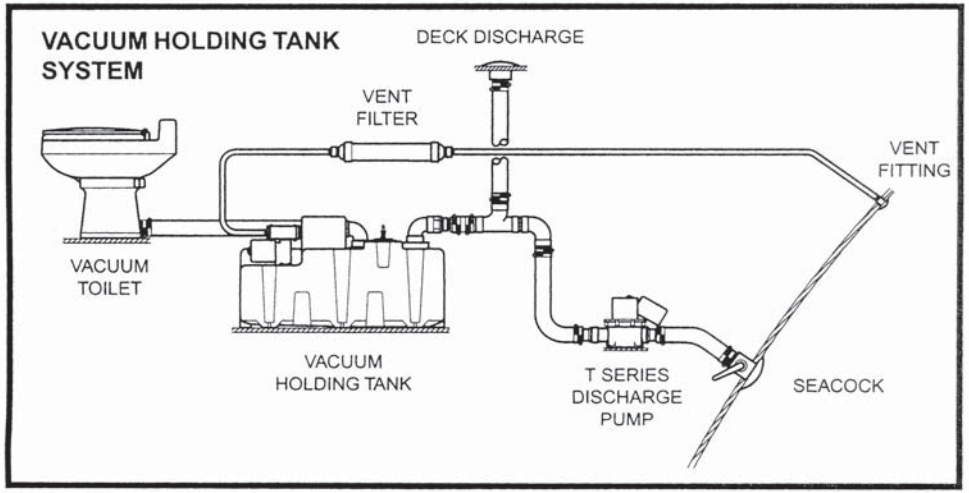

Figure 3.5 VacuFlush® Head

To flush, press flush lever sharply to floor until contents clear bowl. A sharp popping noise is normal when the vacuum seal is broken. Hold flush lever down for three seconds. If flush lever is accidentally released before waste clears bowl, do not attempt to flush toilet again until vacuum pumps stops running. A small amount of water should remain in the bowl for flushing. Do not dispose of sanitary napkins or other insoluble items in toilet. Do not leave VacuFlush® power on for extended periods when away from the boat as this can cause damaging over-cycling if the bowl is not sealed.

Make sure all guests understand the operation of the VacuFlush® system and that the instruction label is easy to read and in plain sight.

Refer to your VacuFlush® manual for complete information about the operation of the system.

Overboard discharge

Important: Overboard discharge of untreated sewage within 12 miles of shore on the east coast and within 9 miles of shore on the west coast is prohibited by law. Check the local authorities for proper discharge procedures in your area. If your boat is going to be used on inland waters, have your dealer seal the overboard discharge portion of your waste system.

If regulations permit, the macerator can be used to pump waste from the holding tank overboard. The MACERATOR circuit breaker at the battery selector switch panel protects the power supply to the macerator. The macerator pulls the waste from the holding tank, grinds the waste into small particles, and pumps the waste over- board through a hull discharge fitting above the water line.

Follow these procedures to operate the macerator:

1. Switch on the MACERATOR switch in the head compartment.

2. Allow the macerator to run until the holding tank is empty, but not longer. **Running the macerator when the tank is empty will cause damage to the pump.**

3. When you hear the pump speed up (indicates tank is empty), immediately turn the switch off.

Note: If the macerator won't turn on, check the circuit breaker at the battery switch panel. If resetting the breaker doesn't allow the macerator to turn on, see your dealer to determine the cause of the problem.

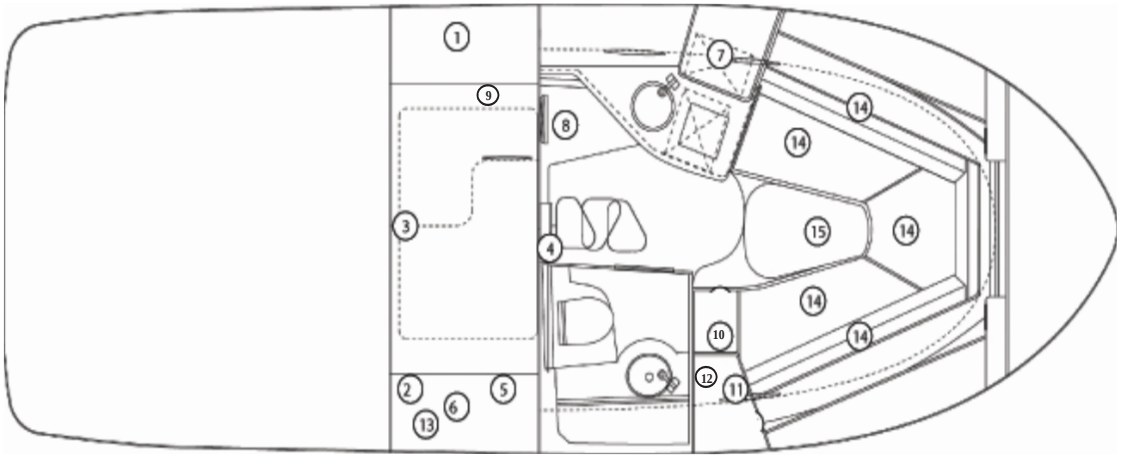

TYPICAL SYSTEMS LAYOUT

1. Water Tank
2. Air Conditioner (Optional)
3. Fwd. Bilge Pump and Float
4. Sump Pump for Head
5. Vacuflush Holding Tank
6. Vacuflush Overboard Discharge Pump (Optional)
7. Microwave
8. LCD Television (Optional)
9. DVD Player (Optional)
10. Stereo, AM/FM/CD
11. Air Conditioner Control
12. CO Monitor
13. Power Steering Pump
14. Storage Areas
15. Bow Thruster (Optional)

Robalo 305 Cabin

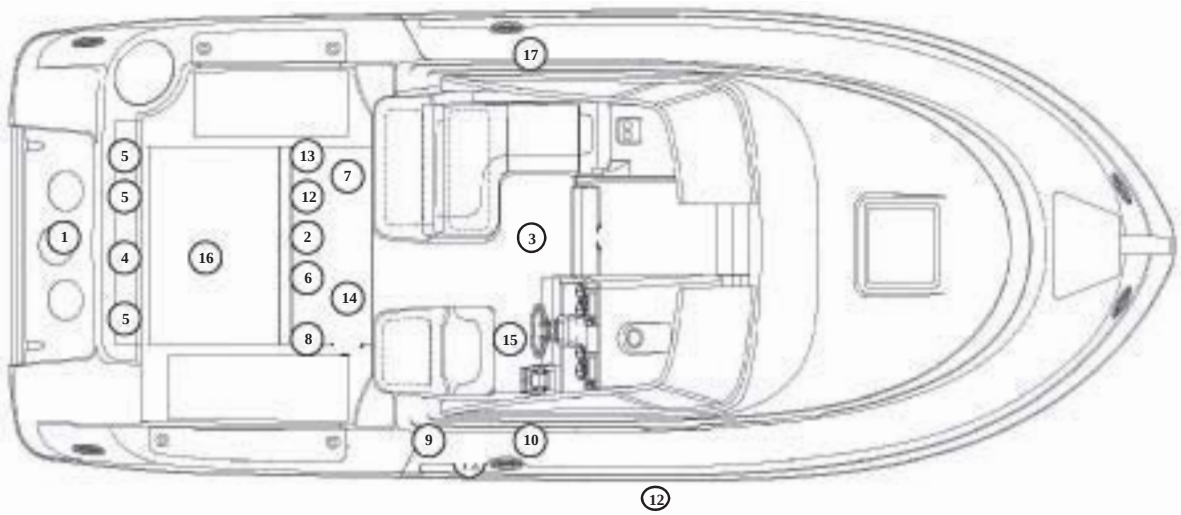

TYPICAL SYSTEMS LAYOUT

1. Aft Bilge Pump and Float
2. Mid Bilge Pump and Float
3. Fwd. Bilge Pump and Float
4. Battery Selector Switch
5. Batteries (3 Each)
6. Livewell/Raw Water Seacock & Air Conditioner (Optional) Sea Strainer for Livewell/Raw Water & Air Conditioner (Optional)
7. Generator (Optional)
8. Air Conditioner Sea Pump (Optional)
9. Air Conditioner (Optional)
10. Vacuflush Holding Tank
11. Vacuflush Overboard Discharge Pump (Optional)
12. Livewell Pump Forward Raw Water Washdown Pump
13. Livewell Pump Aft Water Pump & Filter
14. Generator Seacock (Optional)
15. Steering Helm
16. Fuel Tank, Main
17. Water Tank

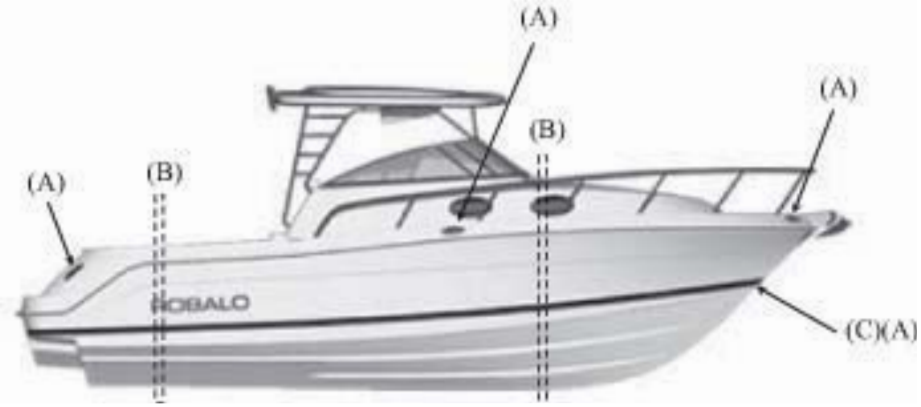

Robalo 305

A - Strong points for anchoring or docking
B - Sling locations
C - Trailering Eye

Figure 3.7 Robalo 305

Robalo 305

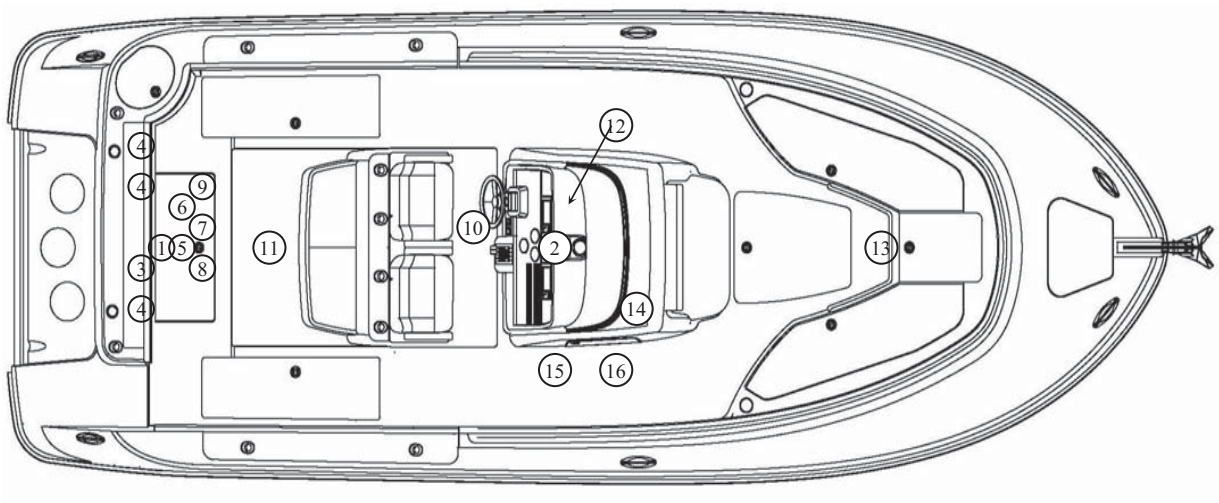

TYPICAL SYSTEMS LAYOUT

1. Aft. Bilge Pump and Float
2. Fwd. Bilge Pump and Float
3. Battery Selector Switch
4. Batteries (3 ea)
5. Livewell/Raw Water Seacock
6. Sea Strainer
7. Livewell Pump Aft.
8. Livewell Pump Fwd.
9. Raw Water Washdown Pump
10. Steering Helm
11. Fuel Tank
12. Sump Pump
13. Water Tank
14. Water Pump & Filter
15. Vacuflush Holding Tank
16. Vacuflush Overboard Discharge Pump (optional)

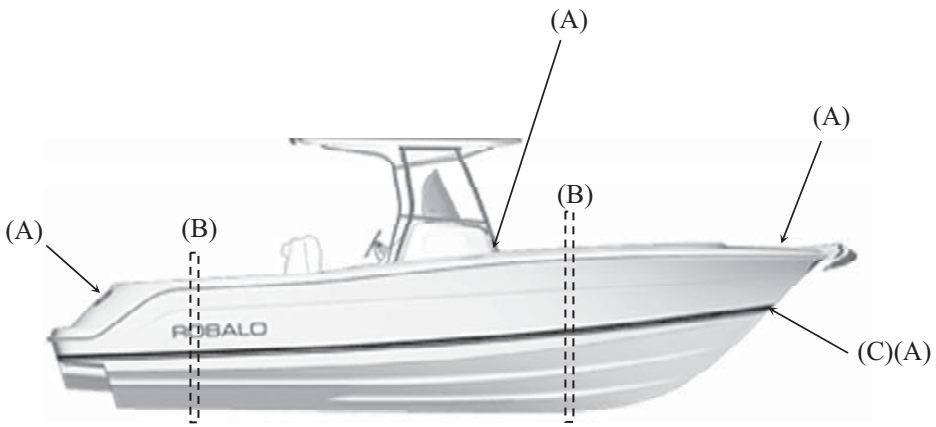

Robalo 300

Robalo 300

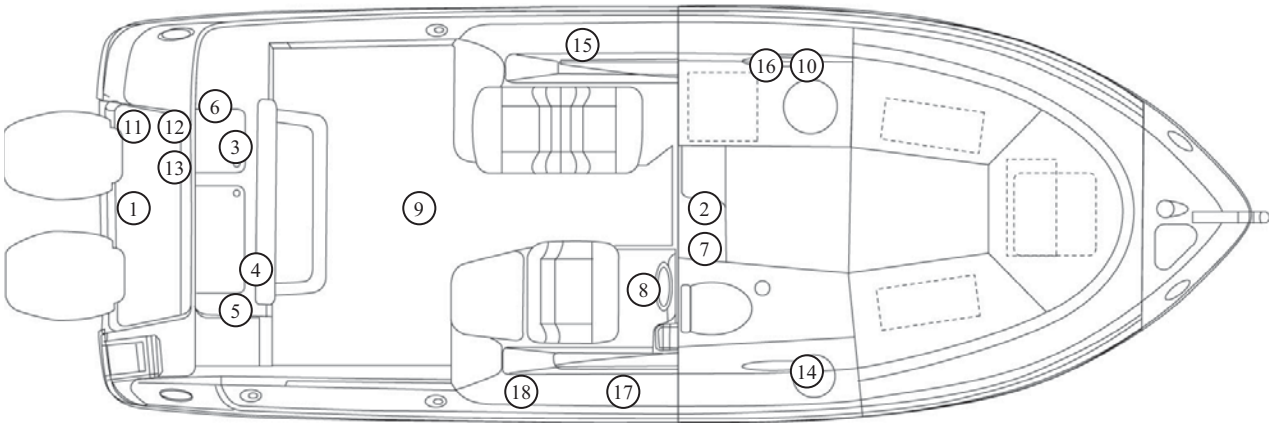

TYPICAL SYSTEMS LAYOUT

1. Aft. Bilge Pump and Float
2. Fwd. Bilge Pump and Float
3. Battery Selector Switch
4. Batteries (2 ea)
5. Livewell/Raw Water Seacock/ Sea Strainer
6. Livewell Pump/Raw Water Washdown Pump
7. Sump Pump
8. Steering Helm
9. Fuel Tank
10. Air Conditioner (optional)
11. Air conditioner Sea Strainer (optional)
12. Air Conditioner Seacock (optional)
13. Air Conditioner Sea Pump (optional)
14. Head Sink
15. Water Tank
16. Water Pump & Filter
17. Vacuflush Holding Tank
18. Vacuflush Overboard Discharge Pump (optional)

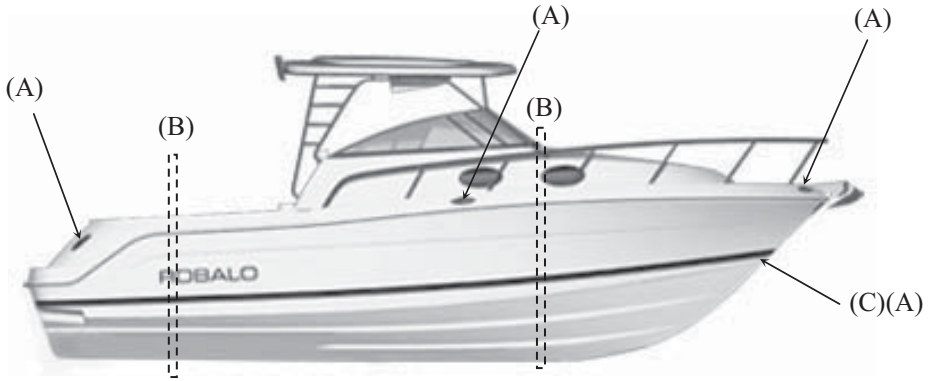

Robalo 265 "SF"

A - Strong points for anchoring or docking
B - Sling locations
C - Trailering eye

Robalo 265 "SF"

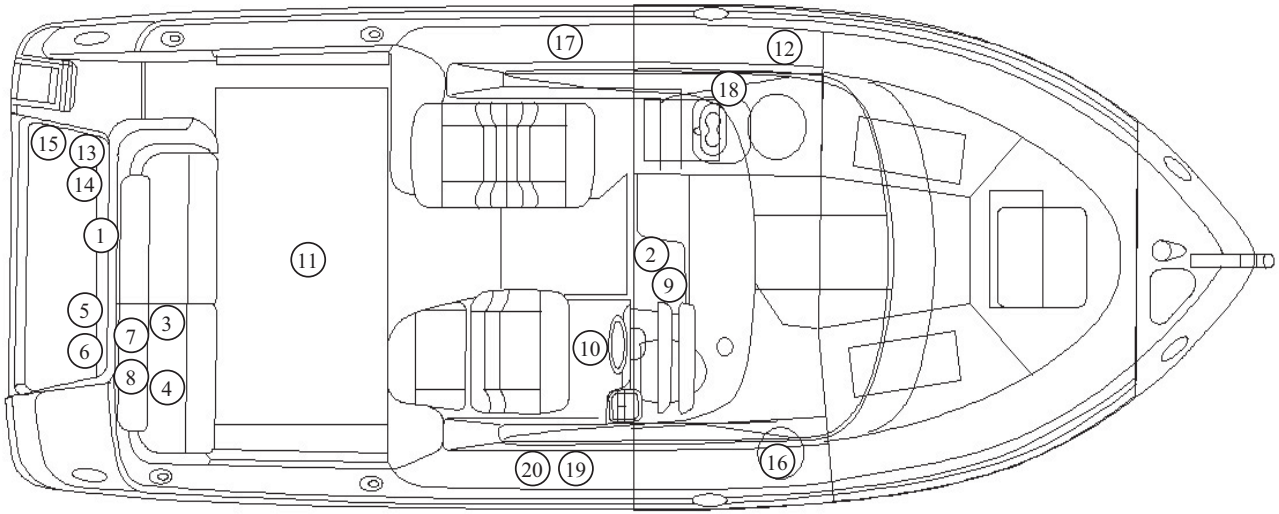

TYPICAL SYSTEMS LAYOUT

1. Aft. Bilge Pump and Float
2. Fwd. Bilge Pump and Float
3. Battery Selector Switch
4. Batteries (2 ea)
5. Livewell/Raw Water Seacock
6. Sea Strainer
7. Livewell Pump
8. Raw Water Washdown Pump
9. Sump Pump
10. Steering Helm
11. Fuel Tank
12. Air Conditioner (optional)
13. Air Conditioner Sea Strainer (optional)
14. Air Conditioner Seacock (optional)
15. Air Conditioner Sea Pump (optional)
16. Head Sink
17. Water Tank
18. Water Pump & Filter
19. Vacuflush Holding Tank
20. Vacuflush Overboard Discharge Pump (optional)

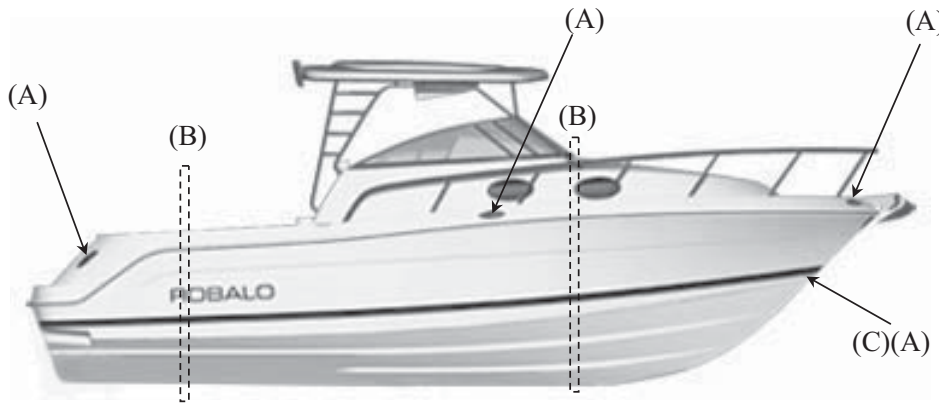

Robalo 265

A - Strong points for anchoring or docking
B - Sling locations
C - Trailering eye

Robalo 265

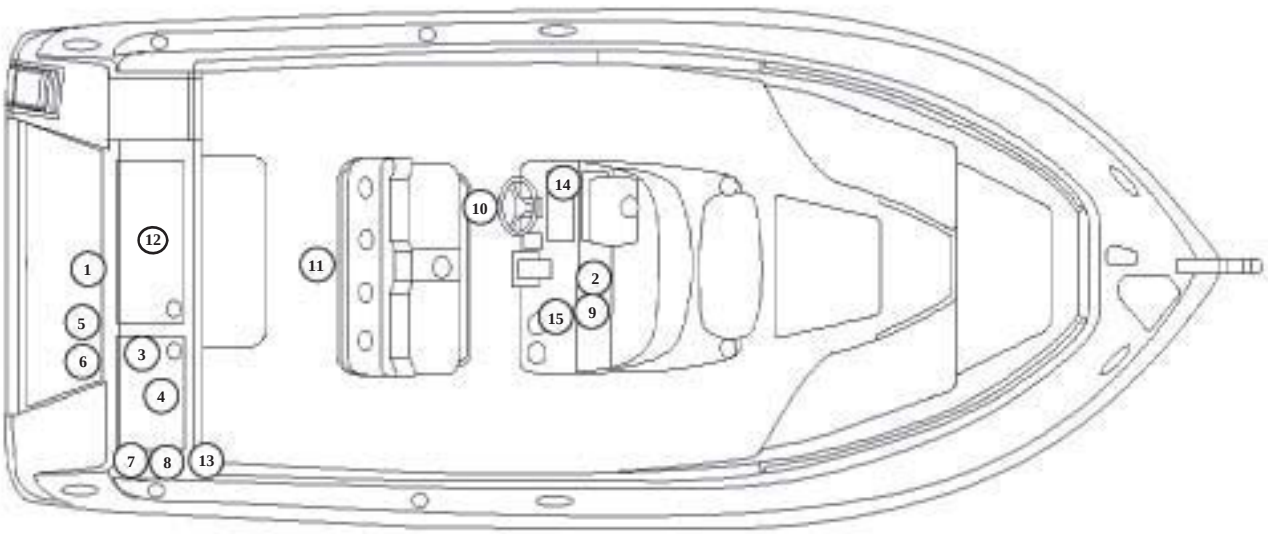

TYPICAL SYSTEMS LAYOUT

1. Aft Bilge Pump and Float
2. Fwd. Bilge Pump and Float
3. Battery Selector Switch
4. Batteries (2 Each)
5. Livewell/Raw Water Seacock
6. Sea Strainer
7. Livewell Pump
8. Raw Water Washdown Pump
9. Sump Pump
10. Steering Helm
11. Fuel Tank
12. Water Tank Under Deck
13. Water Pump & Filter
14. Vacuflush Holding Tank
15. Vacuflush Overboard Discharge Pump (Optional)

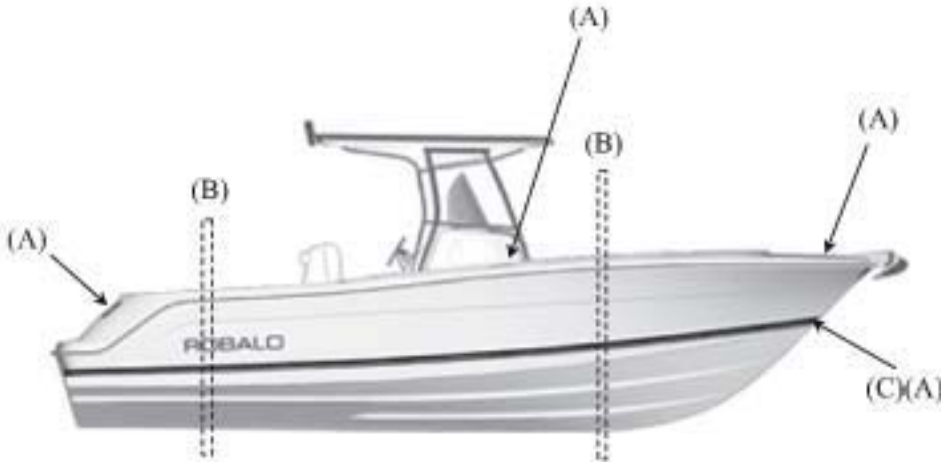

Robalo 260

A - Strong points for anchoring or docking
B - Sling locations
C - Trailering Eye

Robalo 260

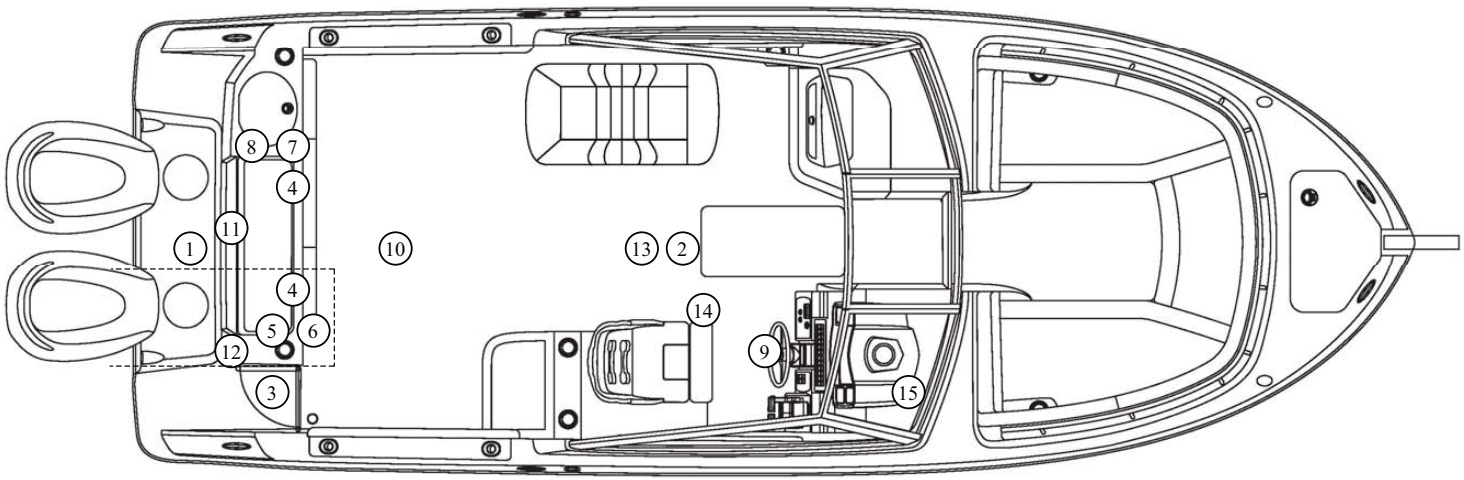

TYPICAL SYSTEMS LAYOUT

1. Aft. Bilge Pump and Float
2. Fwd. Bilge Pump and Float
3. Battery Selector Switch
4. Batteries (2 ea)
5. Livewell/Raw Water Seacock (optional)
6. Sea Strainer (optional)
7. Livewell Pump (optional)
8. Raw Water Washdown Pump (optional)
9. Steering Helm
10. Fuel Tank
11. Water Tank
12. Water Pump & Filter
13. Vacuflush Holding Tank (optional)
14. Vacuflush Overboard Discharge Pump (optional)
15. Power Steering Pump (optional)

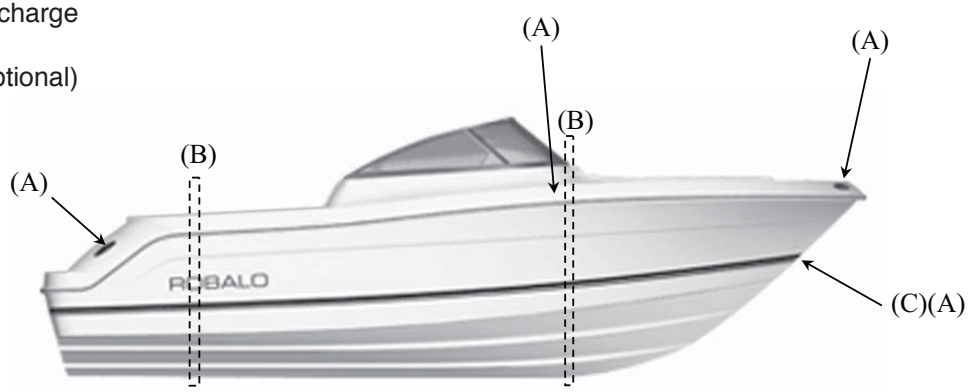

Robalo 247

A - Strong points for anchoring or docking
B - Sling locations
C - Trailering eye

Robalo 247

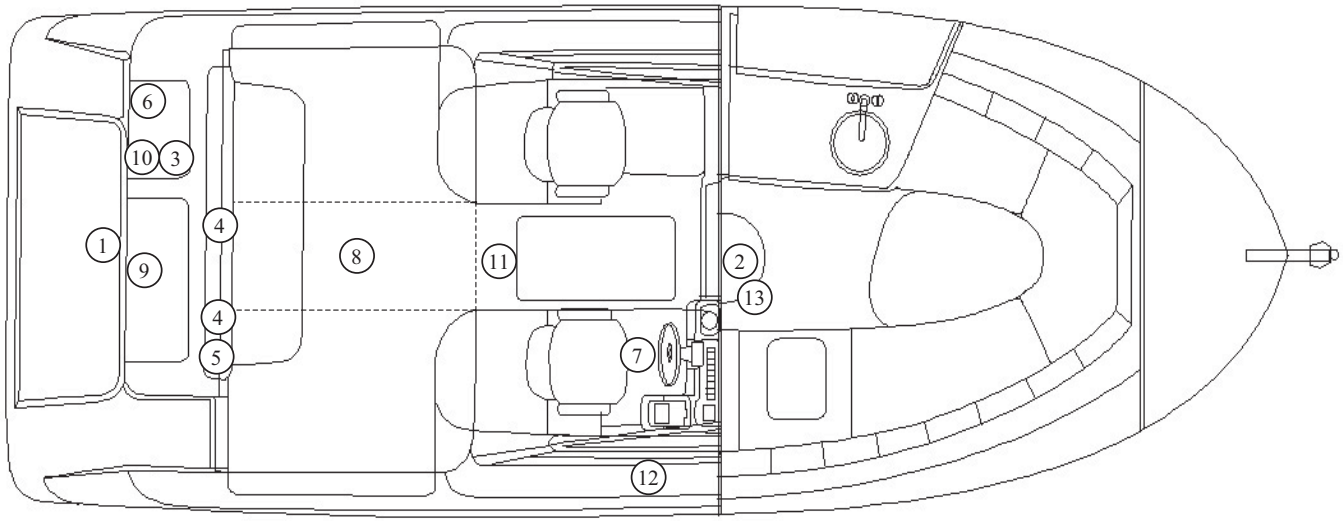

TYPICAL SYSTEMS LAYOUT

1. Aft. Bilge Pump and Float
2. Fwd. Bilge Pump and Float
3. Battery Selector Switch
4. Batteries (2 ea)
5. Livewell/Raw Water Seacock Sea Strainer
6. Livewell Pump Raw Water Washdown Pump
7. Steering Helm
8. Fuel Tank
9. Water Tank
10. Water Pump & Filter Livewell Pump, Secondary System (optional)
11. Vacuflush Holding Tank
12. Vacuflush Overboard Discharge Pump (optional)
13. Shower Sump

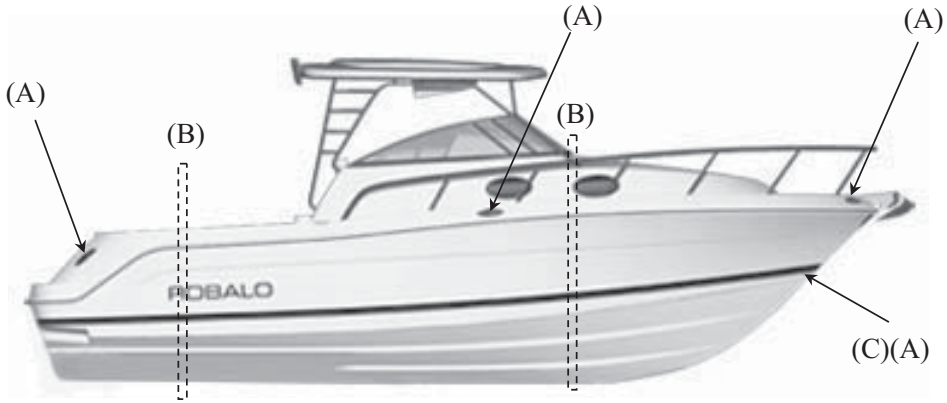

Robalo 245

A - Strong points for anchoring or docking
B - Sling locations
C - Trailering eye

Robalo 245

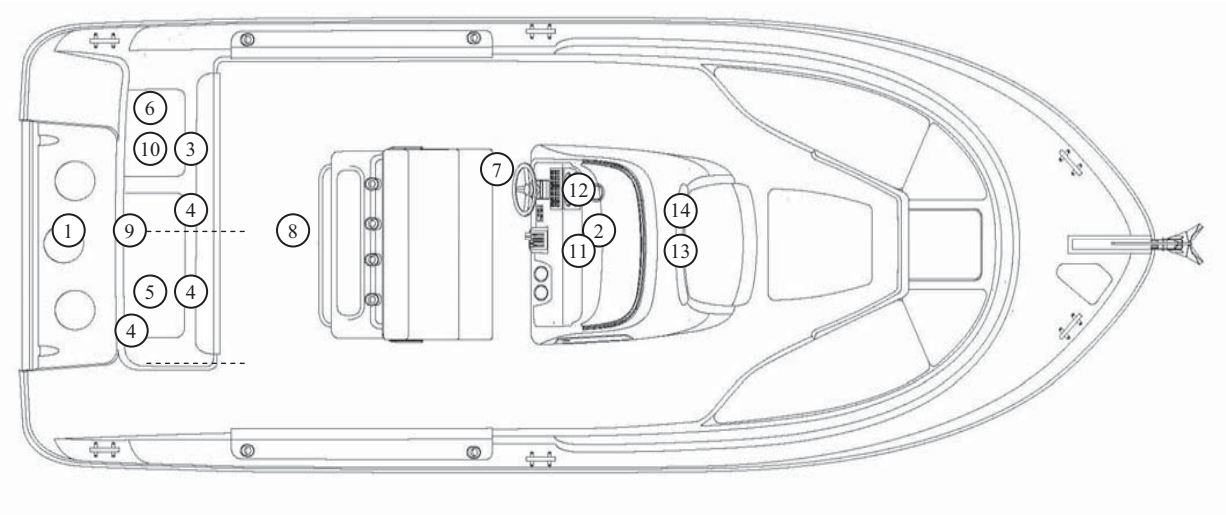

TYPICAL SYSTEMS LAYOUT

1. Aft. Bilge Pump and Float
2. Fwd. Bilge Pump and Float
3. Battery Selector Switch
4. Batteries (2 ea)
5. Livewell/Raw Water Seacock Sea Strainer
6. Livewell Pump Raw Water Washdown Pump
7. Steering Helm
8. Fuel Tank
9. Water Tank
10. Water Pump & Filter
11. Vacuflush Holding Tank
12. Vacuflush Overboard Discharge Pump (optional)
13. Shower Sump
14. Fish Box Discharge Pump

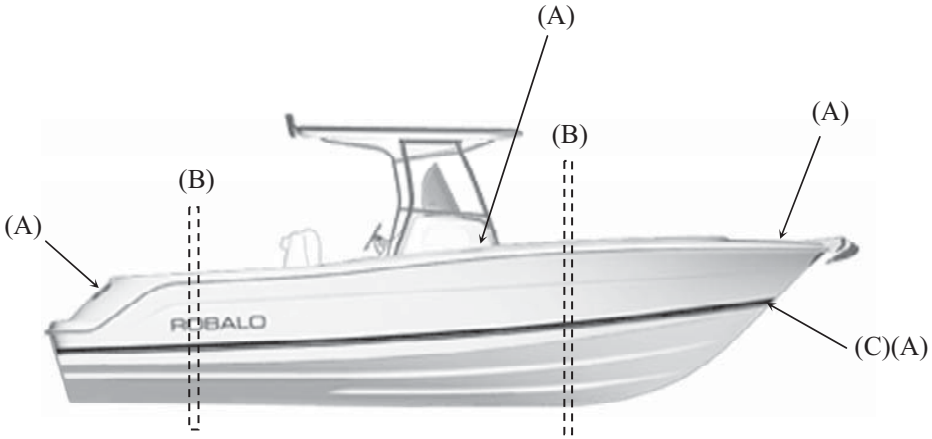

Robalo 240

A - Strong points for anchoring or docking
B - Sling locations
C - Trailering eye

Robalo 240

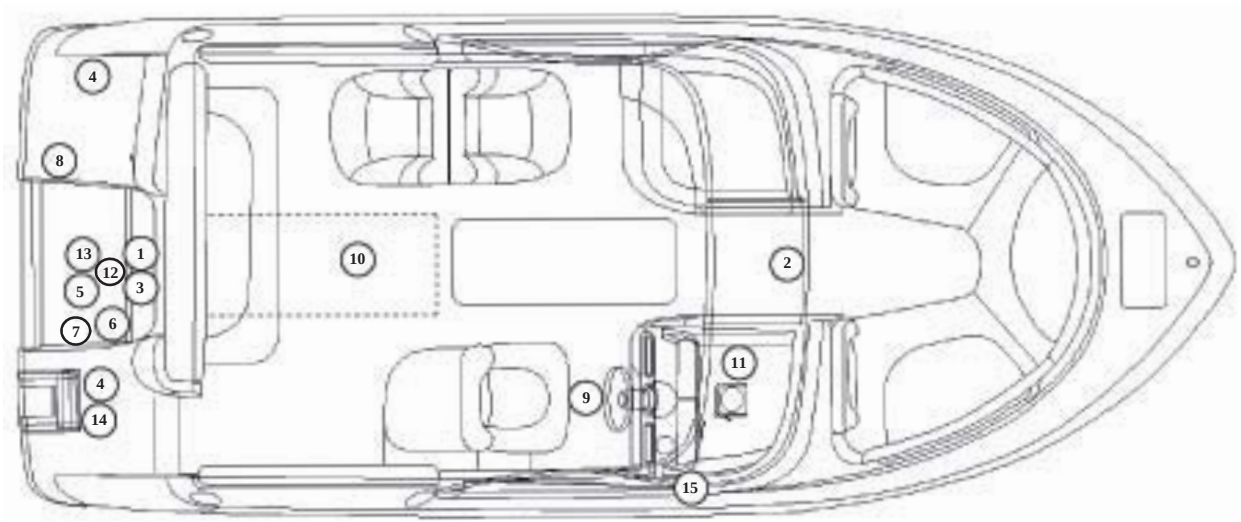

)

TYPICAL SYSTEMS LAYOUT

1. Aft Bilge Pump and Float
2. Fwd. Bilge Pump and Float
3. Battery Selector Switch
4. Batteries (2 Each)
5. Livewell/Raw Water Seacock
6. Sea Strainer
7. Livewell Pump
8. Raw Water Washdown Pump
9. Steering Helm
10. Fuel Tank
11. Water Tank
12. Water Pump & Filter
13. Vacuflush Holding Tank
14. Vacuflush Overboard Discharge Pump (Optional)
15. Power Steering Pump (Optional)

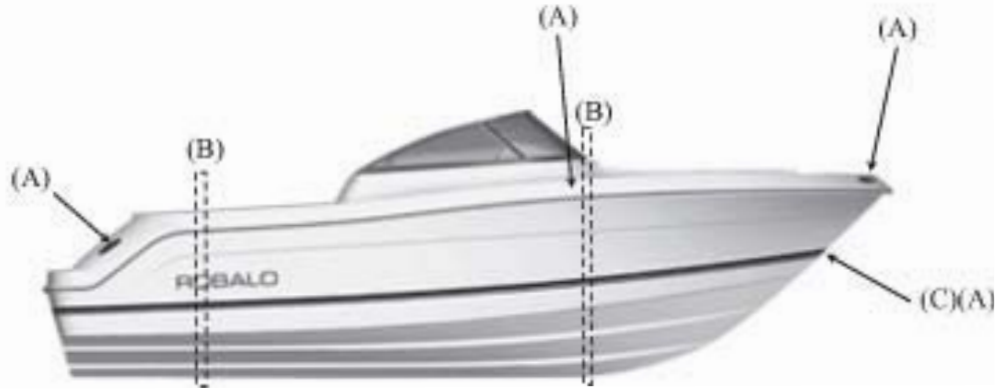

Robalo 227

A - Strong points for anchoring or docking
B - Sling locations
C - Trailering Eye

Robalo 227

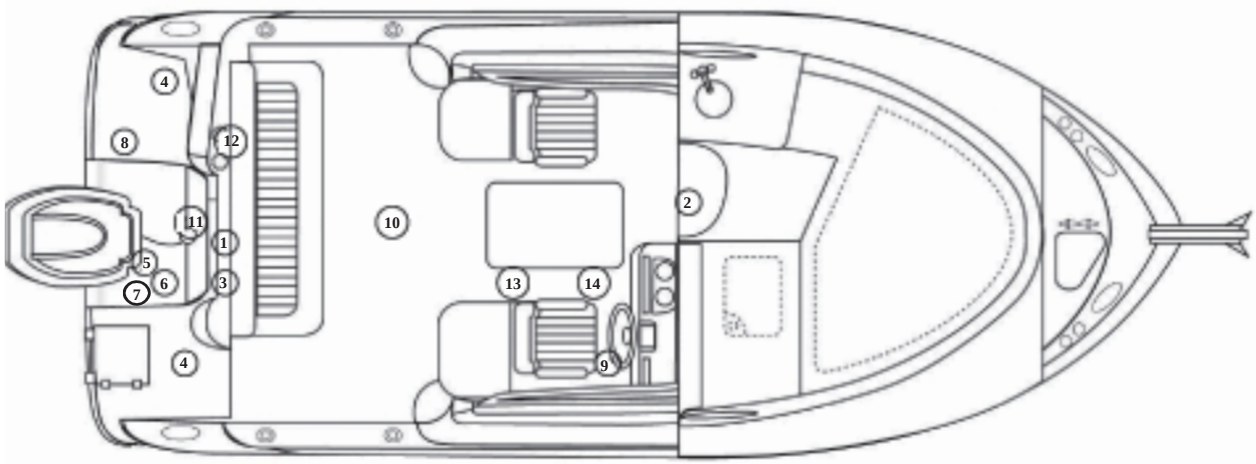

TYPICAL SYSTEMS LAYOUT

1. Aft Bilge Pump and Float
2. Fwd. Bilge Pump and Float
3. Battery Selector Switch
4. Batteries (2 Each)
5. Livewell/Raw Water Seacock
6. Sea Strainer
7. Livewell Pump
8. Raw Water Washdown Pump
9. Steering Helm
10. Fuel Tank
11. Water Tank
12. Water Pump & Filter
13. Vacuflush Holding Tank
14. Vacuflush Overboard Discharge Pump (Optional)

Robalo 225

A - Strong points for anchoring or docking
B - Sling locations
C - Trailering Eye

Robalo 225

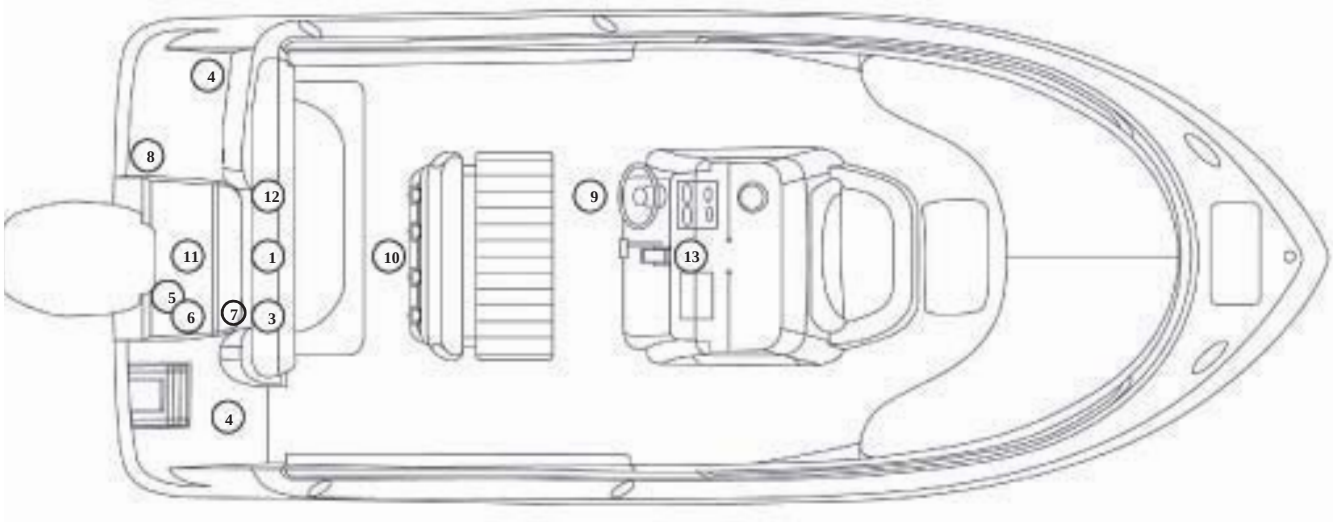

TYPICAL SYSTEMS LAYOUT

1. Aft Bilge Pump and Float
2. Battery Selector Switch
3. Batteries (2 Each)
4. Livewell/Raw Water Seacock
5. Sea Strainer
6. Livewell Pump
7. Raw Water Washdown Pump
8. Steering Helm
9. Fuel Tank
10. Water Tank
11. Water Pump & Filter
12. Vacuflush Holding Tank
13. Vacuflush Overboard Discharge Pump (Optional)

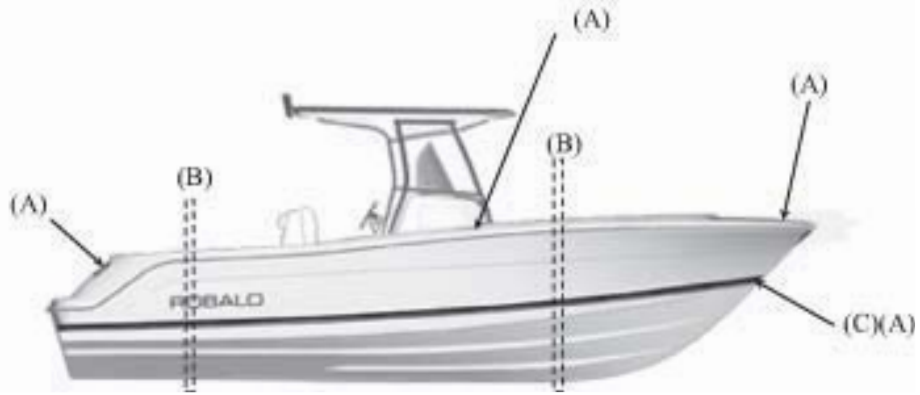

Robalo 220

A - Strong points for anchoring or docking
B - Sling locations
C - Trailering Eye

Robalo 220

A - Strong points for anchoring or docking

B - Sling Locations

C - Trailering Eye

Typical Systems Layout

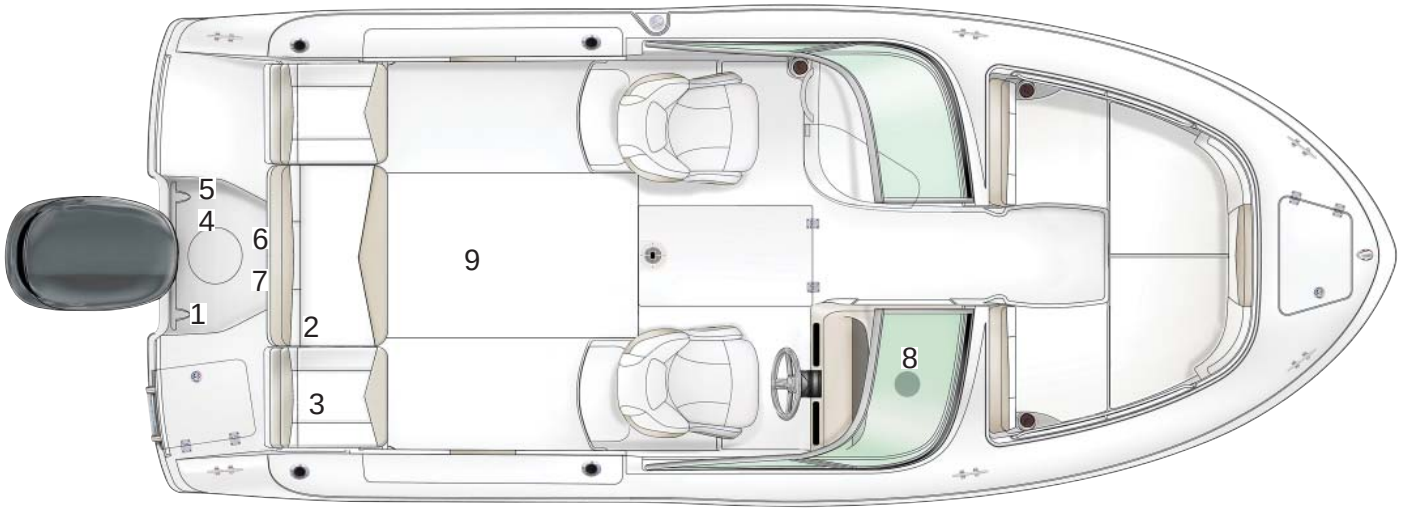

1 - Bilge Pump and Float

2 - Battery Selector Switch

3 - Batteries (2 each)

4 - Livewell / Raw Water Seacock

5 - Sea Strainer

6 - Livewell Pump

7 - Raw Water Washdown Pump

8 - Steering Helm

9 - Fuel Tank

Robalo 207

COMPONENTS

This chapter describes standard and optional components factory installed on our fishing boats. Depending on how your boat is equipped, it may or may not have all of the equipment described in this chapter.

Be sure to read all operation, maintenance, and safety information contained in each component's manual before operation. The manuals are in your owner's packet.

Important: Adhere to all safety precautions in the manufacturer's literature when operating the components.

Note: "Engine" in this Robalo manual means one or two engines depending on how your boat is equipped.

WARNING

WARNING: When using electrical components, observe safety precautions to reduce the risk of fire, electrical shock, personal injury or damage to your boat and/or component.

DASHBOARD AND INSTRUMENT PANEL

Instruments on the dashboard are important for monitoring the performance of your boat and alerting you to possible problems or causes of problems.

Most Robalo boats are equipped with a Yamaha Instrument Operation. Please refer to the quick reference information at the end of this section for set up and usage instructions. For boats equipped with the Command Link Plus system, please see the component owner's manual for Command Link Plus provided by Yamaha.

The **fuel gauge** indicates the approximate amount of fuel in your fuel tank. The reading is most accurate when your boat is operating at idle speed. Be aware that you should compare gauge readings with hours of use versus known fuel consumption because the gauge is only an approximate reading of the amount of fuel in your boat's tank.

The **voltmeter** indicates battery voltage. When the engine is running, the meter should read between 12 and 15 volts. A significantly lower reading may indicate a battery or alternator problem or a heavy drain on the battery. If the voltmeter needle moves back and forth in wide swings, the alternator may not be charging properly.

The **tachometer** indicates the operating speed of the engine in revolutions per minute (RPM). It does not indicate the speed of your boat moving through the water. Do not exceed the maximum full throttle RPMs stated in the engine operator's manual.

The **speedometer** indicates the speed your boat is crossing the water in miles per hour. Water pressure from a water pickup at the boat's stern is measured and converted into a reading on the speedometer.

The **compass** indicates the direction or heading in which your boat is traveling. Have the compass calibrated by an experienced technician. See the manufacturer 's instruction manual for details about proper operation and maintenance.

CAUTION

CAUTION: Compass reading may be erroneous if compensator is not properly adjusted. Always make a deviation table and use it when navigating with compass.

VHF Radio

Some models are equipped with a VHF Radio. Refer to owner's manual packet for instructions and warranty information.

WINDLASS SYSTEM

Some models come equipped with a windlass option. Your anchor can be raised and lowered with the windlass by a toggle switch located at the helm or by two separate foot switches located at the bow of the boat. It is important to remember to use the anchor safety lanyard on the anchor chain when anchor is in fully retracted position. By attaching the lanyard clasp to one of the chain links, you are protecting your boat from any incidental damage from a swinging anchor. (Figure 4.1)

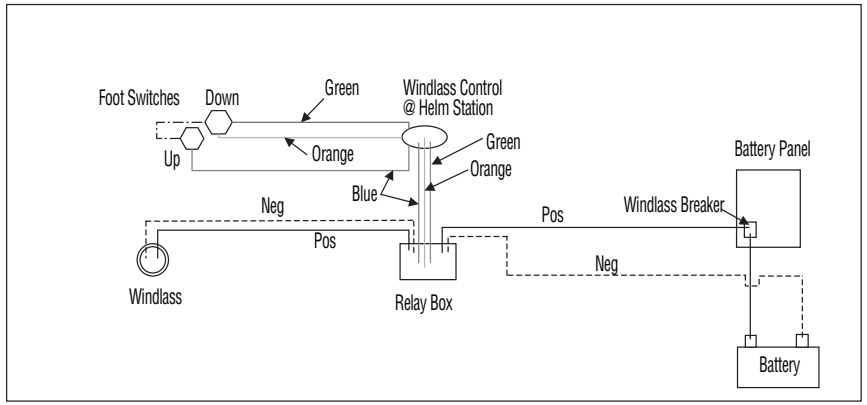

Figure 4.1 Windlass Schematic

Note: When anchor is in the up position and locked in slot, be sure to secure the anchor to the deck before getting underway

WARNING

WARNING: Moving parts may cut or crush, read instructions before use.

Windlass Safety Tips

- Always tie off rode while at anchor
- Always secure rode/anchor when under way
- Always look before deploying your anchor
- Always motor up to anchor while retrieving
- Never use your windlass to pull or tow boat
- Never stick fingers in or around gypsy while operating
- Always shut off breaker when working on windlass
- Always shut off breaker when windlass is not in use
- Keep all loose clothing and hair away from windlass when operating
- Never us windlass to lift a person

Refer to owner's manual packet for instructions and warranty information.

HYDRAULIC STEERING SYSTEM

Your boat has a hydraulic steering system. This system has two basic elements: helm pump and cylinder. The steering wheel is mounted to the shaft of the helm pump. Turning the steering wheel pumps hydraulic fluid to the steering cylinder. Extra hydraulic fluid prevents air from entering the system. A relief valve protects both the mechanical portion of the rudder (in case the rudder strikes a hard object) and the hydraulic system. This is a manual system, not a power steering system. The effort required to turn the wheel will increase as the system is called on to exert more force on the engines. At no time, should anyone expect this system to turn as easily as a car's power steering.

Check the level of hydraulic fluid in the helm regularly and replenish if necessary. All other maintenance should be performed by your dealer.

Power Steering Unit

Your boat may have an optional or standard power steering unit for the hydraulic steering system. This unit is powered off of one engine only. If you lose power to the power steering system due to an engine or electrical issue, you will still maintain your normal hydraulic steering system.

MULTIFUNCTION NAVIGATION DISPLAY SYSTEM

An optional high performance multifunction display is available on select models. Robalo provides one of the most powerful multi-function navigational displaysystems, packed with power and performance features. Boat owners will have access to 3D chart-plotting, HD Digital technology, Sirius Satellite Weather and more.

THROTTLE

CAUTION

CAUTION: Acceleration at full throttle is not recommended for certain periods of the engine "break-in period." Refer to the engine owners manual for details.

The throttle controls the boat's speed and the direction the boat travels. If the throttle is in its center neutral position, the boat will not move forward or aft with the engine running. Moving the throttle forward from center moves the boat forward. Moving the throttle aft moves the boat backward. The speed at which the boat moves is directly related to how far the operator pushes the throttle.

Note: The throttle must be in its center neutral position before the engine will start. See your engine manufacturer's owner's manual for specific starting instructions.

CONTROLS

Steering

Other than the common sense and good judgment of the operator, the steering system is the most important safety system on your boat. Factors requiring operator attention for safe steering include engine torque, trim tab settings, waves and speed.

POWER TRIM

The power trim system allows the operator to raise and lower the engine to adjust the drive angle while underway. It also allows the operator to raise and lower the engine for trailering, beaching, and operation in shallow water. Control your trim setting with the trim switch on the control handle. Section 5 discusses the importance of proper trim while operating your boat.

Note: Refer to your engine manufacturer's owner's manual for information concerning maintenance and operation.

STOVE

Note: Some boats may have an optional or standard electric or butane stove. Please refer to your stove manual for proper usage, maintenance and caution statements. The electric stove operates off the shore power system or onboard generator, and has a circuit breaker labeled "range" on the main electrical control panel.

Important: The operator's manual and safety instructions explain special safety precautions, maintenance, safety and proper operating procedures. Robalo Boats cannot overemphasize the importance of operating your stove safely. CAREFULLY READ and understand the instructions before operating the stove.

WARNING

WARNING: Stove flame consumes oxygen. Suffocation is possible. Ventilate cabin when using stove.

⚠WARNING

WARNING: Alcohol flame is invisible in sunlight. Fueling ignited burner can cause explosion. Do not light burner unless flame is extinguished and burner is cool. Carefully follow all instructions in stove owner's manual.

WATER HEATER

The water heater, which runs on 120 or 220 volt AC power, has an ON/OFF switch at the main panel in the cabin area. A check valve in the water heater piping prevents hot water from washing back into the cold water source. A pressure relief valve prevents damage if pressure or temperature gets higher than safe settings. The thermostat on the water heater is preset and is not adjustable.

⚠WARNING

WARNING: Hydrogen gas may develop if you have not used heater for two weeks or more. Hydrogen gas is extremely flammable. Open hot water faucet at galley sink before you use any appliance connected to hot water system. Do not smoke or have open flame near open faucet.

Note: Refer to the water heater instruction manual for safety precautions and for detailed operation, maintenance, and winterizing instructions. In areas where frost is possible, the heater tank must be drained to prevent possible damage during winter storage.

Before turning on power to the water heater, be sure tank is full and water is covering the heating element. The heater tank must be kept full of water to avoid damage to the heating elements.

REFRIGERATOR

The refrigerator/freezer is designed to operate on 120 or 220 volt AC and/or 12 volt DC power. When the 120 or 220 volt system is not operating, the refrigerator operates on 12 volts. A built-in relay automatically switches to the correct power. The AC control is an OFF/ON breaker switch at the main panel in the cabin. The unit also has a 10 amp direct current (DC) breaker on the battery switch panel in the engine compartment.

The power needed by the refrigerator exerts a continuous drain on the battery when it is powered by the 12 volt DC system. It can draw a 100 amp battery dead in a short period of time. To avoid excessive battery drain, keep the temperature control at a medium setting when air temperatures are in the 70° to 90° F range. If you plan an overnight trip and shore power is not available, run the generator or the engine occasionally to ensure your battery is charged.

Note: Refer to the refrigerator instruction manual for safety precautions and for detailed operation and maintenance instructions. The manual is in your owner's packet.

MICROWAVE OVEN

The microwave oven is controlled by an electronic touch control panel. The breaker at the main panel must be on in order to use the microwave. For a detailed description of the microwave oven features see the owner's manual supplied by the manufacturer.

⚠CAUTION

CAUTION: To reduce the risk of burns, electric shock, fire, injury to persons or exposure to excessive microwave energy, read ALL instructions before using the microwave oven. Be sure to secure turntable while underway to prevent damage to the unit.

BILGE PUMP

The automatic electric bilge pump(s) removes water from the bilge area. If the pump motor runs but does not remove any water, the pump may be clogged. If there is no visible debris clogging the pump and water is still not being removed, check the discharge hose for kinks or obstruction. The bilge pump can also be operated in a manual mode by the switches on the main electrical panel.

Note: The Federal Water Pollution Act prohibits the discharge of oil or oily waste into or upon the navigable waters and contiguous zones of the United States if such discharge causes a film or sheen upon, or discoloration of, the surface of the water, or causes a sludge or emulsion beneath the surface of the water. Violators are subject to a penalty.

RUNNING AND NAVIGATIONAL LIGHTS

If you operate your boat at night, the law requires you to turn your boat's running lights ON. Your Robalo boat has one white, one red (port), and one green (starboard) light. Check running lights periodically for proper operation. Check them before heading out after dusk.

There are various running light combinations for the types of vessels you may encounter while boating. You should learn to identify what these combinations are and the type of vessel they are associated with. Robalo recommends participation in a "safe boating" course to learn more about the various light combinations.

The running/navigation lights are controlled at the helm station by a three position rocker switch. This allows for selection of the mast (white) light ON when anchored or moored, or to have the mast (white), port (red) and starboard (green) lights all ON while underway.

DOCKING LIGHTS

Docking lights are available on select models. Halogen docking lights are used for safe night time docking, and are glare-free because they mount below the deckline. If your boat is equipped with docking lights, they are powered by a switch at the helm.

UNDERWATER LIGHTS

Underwater lights provide boating enthusiasts with the latest enhancement for their boat, insuring a memorable experience and creating a unique signature visible from shore or other boats. If your boat is equipped with LED underwater lights, they are powered by a toggle switch at the helm.

It is the boat owner's responsibility to manage battery voltage while using this feature, to ensure battery(s) are not drained to a point where engine will not start.

Refer to owner's manual packet for instructions and warranty information.

STEREO SOUND SYSTEM

The stereo in your boat is equipped with an AM/FM radio, MP3 Jack, and premium water resistant speakers. The stereo also has an antenna lead. The stereo will turn off when motor is cranked. This is normal operation. The stereo memory has power at all times.

Some models are equipped with stereo speaker upgrades with amps.

Some models are equipped with a stereo remote located at the dash for operator's convenience.

Note: It is the boat owner's responsibility to manage battery voltage while using this feature to ensure battery/batteries are not drained to a point where engine will not start.

Refer to owner's manual packet for instructions and warranty information.

TELEVISION WITH DOCKSIDE CABLE INLET AND DVD PLAYER

Some models come with a television with a dockside cable inlet. Refer to owner 's manual packet for instructions and warranty information.

Note: An A/B switch located in the galley, will change television from dockside cable inlet to antenna.

GENERATOR

The optional onboard generator provides AC power to your boat's electrical system. If your boat has a generator, it is mounted in the engine compartment. Depending on the generator selected, AC power output ranges from 3.0 kilowatts (kW) to 4.2 kW or for Euro 3.0 kW to 4.2 kW.

⚠WARNING

WARNING: Accidentally starting the generator can cause severe personal injury or death. Stop generator and disable by disconnecting battery cables (negative [-] cable first) when maintenance or repairs are made to the engine, controls, or generator. Do not disconnect cables if gas fumes are present.

⚠CAUTION

CAUTION: Prior to starting generator, check for proper operation of carbon monoxide detector.

Note: For further information on carbon monoxide hazards, refer to Section 2 pages 8, 9 and 10. Please refer to your owner's manual for specific instructions concerning proper operation of carbon monoxide detector.

Note: Follow all generator instructions in the operator's manual. The manual includes detailed information of specifications and procedures for safe operation, maintenance, and winterizing. It also explains how you can obtain service for the generator. The manual is in your Owner's Packet.

⚠WARNING

WARNING: Never assume that operating the blower removes all explosive fumes from engine compartment. If you smell any fuel, immediately stop engine and turn off all electrical components. Extinguish all smoking materials. Determine source of smell immediately.

⚠WARNING

WARNING: Gasoline vapors can explode if present while starting generator. Check engine compartment for gasoline or vapors. Operate blower for four (4) minutes. Run blower while generator is running.

1. Run bilge blower for four minutes before starting generator. Run blower while generator is operating.

2. Make sure seawater intake valve (seacock) is open. Seacock must remain open at all times when generator is operating. Seawater strainer must be free of debris to prevent clogging intake. Inspect seawater strainer frequently.

Note: Robalo recommends not using the generator when underway. When underway and not using the generator, the seacock should be closed.

3. Press GENSET START switch on main panel in cabin. When starting generator, never operate starter for more than 30 seconds. Wait at least 30 seconds before each attempted start.

The generator may also be started using the switch on the generator. Please refer to generator manufacturer's owner's manual for more information.

4. Look over side of boat and check for water flowing from discharge port. If water is not flowing, stop the generator. Check for the following: blocked water intake, air in line, clogged sea strainer, or closed seacock that should be open. Correct the problem before restarting the generator.

5. Before stopping, run generator at no load for three to five minutes to allow lubricating oil and engine cooling water to carry heat away from combustion chamber.

AIR CONDITIONERS

Electrical control for the unit is at the main electrical panel in the cabin. Refer to Section 3 for additional information about this panel. The air conditioner runs on 120 or 220 volt AC power from either the onboard generator or shore power. You can control heating and cooling from the air conditioner control panel.

General instructions for operating the air conditioner are as follows:

1. Make sure the sea water inlet seacock is open and strainer is free of debris.

2. Make sure the sump pump is on when you operate the air conditioner. Condensation from the air conditioner drains to the sump pump.

3. Make sure 120 or 220 volt AC switch for air conditioner is on.

4. Set temperature on display. Select either heating or cooling.

5. Turn switch to ON. Fan, water pump, and compressor will start.

6. Look over side of boat and check for water flowing from discharge port. If water is not flowing, stop air conditioner. Check for the following: blocked water intake, air in line, clogged sea strainer, or closed seacock that should be open. Correct the problem before restarting the air conditioner.

Follow these procedures to operate the air conditioner on shore power:

1. Make sure the air conditioner breaker in the cabin is off.

2. Plug AC shore power cord into the receptacle on the boat, and turn clockwise to lock. Thread the locking ring on the inlet to secure the cord. Connecting the cord to the boat first will prevent dropping a "hot" cord into the water.

3. Make sure dockside power is off. Then, plug in the cord. Turn the dockside shore breaker on.

4. Immediately check the polarity light on the main cabin panel. If the reversed polarity light on the main panel illuminates, do not turn on the cabin main breaker. Turn off the dockside shore power breaker and disconnect the power cord. Inform marina manager of the problem.

5. Make sure the sea water inlet seacock is open and strainer is free of debris.

6. Make sure the sump pump is on when you operate the air conditioner. Condensate from the air conditioner drains to the sump pump.

7. Make sure 120 or 220 volt AC switch for air conditioner is on.

8. Set temperature on display. Select either heating or cooling.

9. Turn selector switch to ON. Fan, water pump, and compressor will start.

10. Look over side of boat and check for water flowing from discharge port. If water is not flowing, stop air conditioner. Check for the following: blocked water intake, air in line, clogged sea strainer, or closed seacock that should be open. Correct the problem before restarting the air conditioner.

Note: On some Robalo models, there is an optional 12V air conditioner. Power supplied to the optional 12V air conditioner comes from two additional batteries located in the engine compartment. These batteries are recharged when docked and connected to shore power with the battery charger breaker on. Batteries are also recharged by the engine alternator when the boat is underway.

Note: The manufacturer's operation manual covers detailed information for operating the air conditioner including temperature setting, display and calibration, and fan speed and calibration. Also provided are technical data and troubleshooting information to help you keep the unit in safe and proper operating condition.

TRANSOM SHOWER

Nothing is more luxurious than being able to rinse yourself off with fresh water after swimming or water skiing in salt water. An optional or standard transom shower, depending on model, is located at the transom and has pressurized water. Most showers have a push button shower head. Pressure water switch is located at helm.

SUMP PUMP

If your boat is equipped with a sump pump, all your drained water from the air conditioner condensation pan, head floor drains, and some sinks will go to the sump unit to be drained overboard. A float unit located in the sump tank will be activated as the water level raises, which will turn on the pump to discharge the water overboard. Failure to have the sump unit on will cause the sump to overflow into the bilge compartment.

FIRE EXTINGUISHERS

As the boat owner, you are responsible for making sure you have the required number of fire extinguishers. Fire extinguishers must be approved by the U.S. Coast Guard.

Boats longer than 26 feet and shorter than 40 feet: Two Type B-1 or at least one Type B-2 portable hand extinguishers. If your boat has a fixed fire extinguishing system approved by the U.S. Coast Guard, one Type B-1 extinguisher is required.

Boats longer than 16 feet and shorter than 26 feet: At least one portable hand Type B-1 fire extinguisher.

All fire extinguishers should be mounted in a readily accessible location away from the engine compartment. Everyone on board should know where the fire extinguishers are and how to operate them.

If your fire extinguisher has a charge indicator gauge, cold or hot weather may affect the gauge reading. Consult the instruction manual supplied with the fire extinguisher to determine the accuracy of the gauge.

HIGH WATER ALARM

Your cabin boat may be equipped with a high water alarm. To determine if your boat has a high water alarm, contact your dealer. A horn under the dash will sound if the water level in the bilge is excessive. Periodically test the system by activating the float unit mounted on a sidewall or on the transom in the aft bilge area. If the warning horn activates, immediately put on your life jacket and seek safety. If conditions allow, determine the cause of the high water and make needed repairs.

Tachometer Unit (Square) Quick Reference

Adjusting trolling speed (*)

1. MODE (1 second): To activate the trolling speed setting mode.

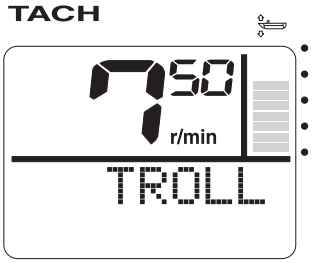

2. SET: To decrease the engine speed.
3. MODE: To increase the engine speed.
4. SET (1 second): To return to the normal display and to the default engine idle speed.

Changing backlight settings

1. SET + MODE : To activate the backlight mode.
2. SET : To switch between LIGHT ON and LIGHT OFF.
   MODE : Press to switch between the five brightness levels (1-5).

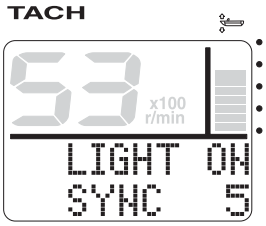

3. MODE (1 second): To switch between SYNC and non-sync.
4. SET + MODE or wait 5 seconds: To return to the normal display.

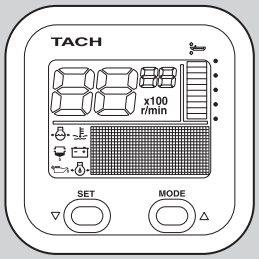

Total hour/Trip hour display

1. MODE : To switch Total hour/Trip hour display.
2. SET + MODE (1 second): To reset the trip hours (Tr).

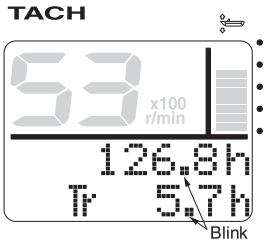

Changing multifunction display

MODE : Press to switch between the displays.

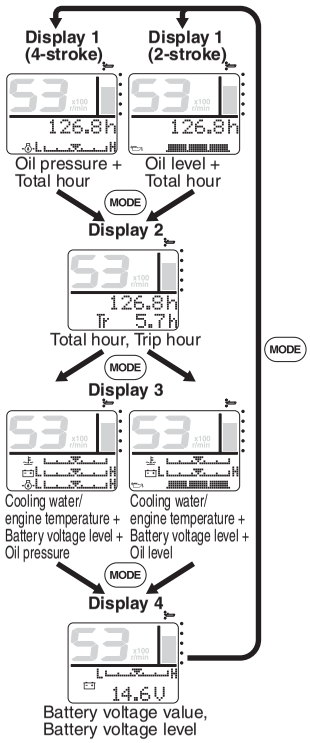

Periodic maintenance notification

Consult an authorized Yamaha dealer for periodic maintenance.

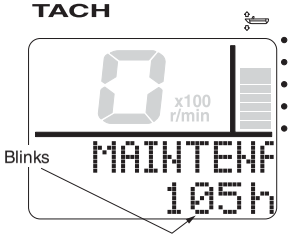

Water detection warning

Consult an authorized Yamaha dealer to maintain the fuel system.

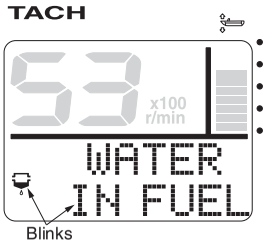

(*) This adjustment cannot be made on outboard motors that are not equipped with the trolling speed adjustment function.

Speedometer Unit (Square) Quick Reference

Changing backlight settings

1. SET + MODE : To activate the backlight mode.
2. SET : To switch between LIGHT ON and LIGHT OFF.
   MODE : Press to switch between the five brightness levels (1-5).

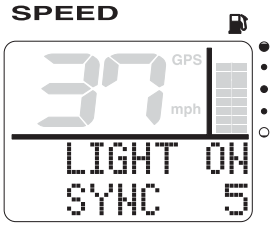

3. MODE (1 second): To switch between SYNC and non-sync.
4. SET + MODE or wait 5 seconds: To return to the normal display.

Changing multifunction display

Since "Display 1" is the only default display, the display cannot be switched until additional ones are set.

MODE : Press to switch between the displays.

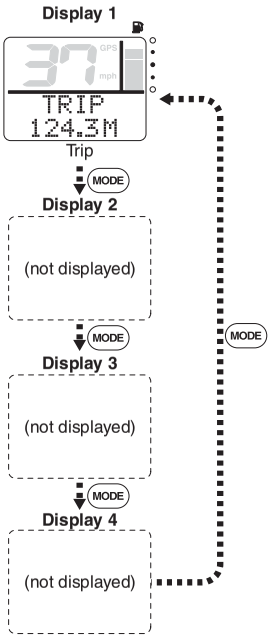

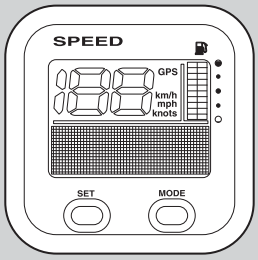

Trip display

SET + MODE (1 second):
To reset the distance traveled.

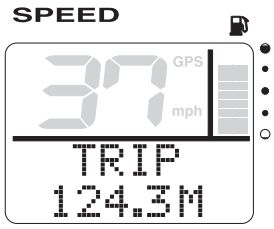

Setting the time (GPS has been installed)

1. SET : To activate the time setting mode and switch to the time setting display.

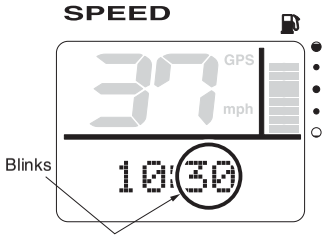

2. MODE : To change the minutes. Press and hold to advance quickly.
3. SET : To set the hours.
4. MODE : To change the hours. Press and hold to advance quickly.
5. SET : To set the time and return to the normal display.

Switching the speed sensors

1. SET (4 seconds): To activate the speed sensor setting mode.
2. MODE : Press to switch between the speed sensor types.

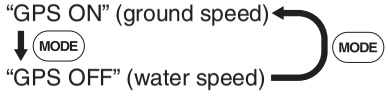

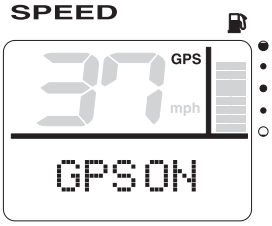

3. SET (1 second): To set the speed sensor and return to the normal display.

Speed & Fuel meter Unit (Square) Quick Reference

Changing multifunction display

Since "Display 1 and 2" are the only default displays, the display cannot be switched until additional ones are set.

MODE : Press to switch between the displays.

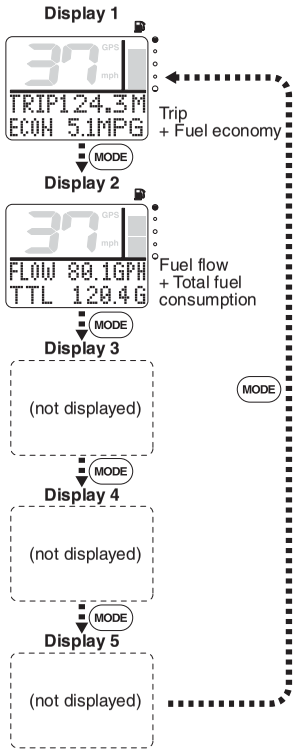

Changing backlight settings

1. SET + MODE : To activate the backlight mode.
2. SET : To switch between LIGHT ON and LIGHT OFF.
   MODE : Press to switch between the five brightness levels (1-5).

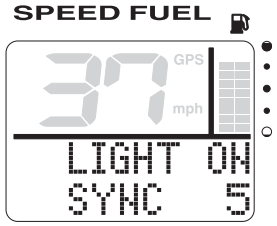

3. MODE (1 second): To switch between SYNC and non-sync.
4. SET + MODE or wait 5 seconds: To return to the normal display.

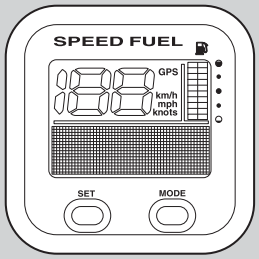

Trip display

SET + MODE (1 second):
To reset the distance traveled.

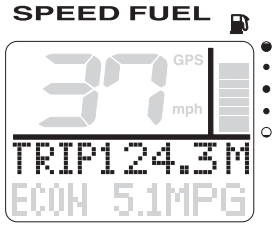

Total fuel consumption display

1. MODE : To switch FLOW/TTL display.
2. SET + MODE (1 second):
   To reset the TTL display.

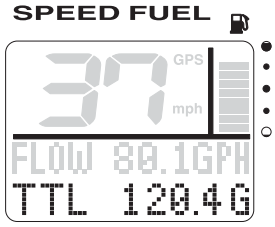

Setting the time (GPS has been installed)

1. SET : To activate the time setting mode and switch to the time setting display.

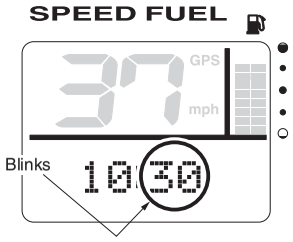

2. MODE : To change the minutes. Press and hold to advance quickly.
3. SET : To set the hours.
4. MODE : To change the hours. Press and hold to advance quickly.
5. SET : To set the time and return to the normal display.

Switching the speed sensors

1. SET (4 seconds): To activate the speed sensor setting mode.
2. MODE : Press to switch between the speed sensor types.

"GPS ON" (ground speed) ← MODE
↓ MODE
"GPS OFF" (water speed)

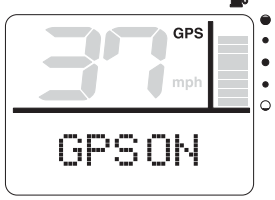

3. SET (1 second): To set the speed sensor and return to the normal display.

Printed in USA
Jun. 2007 – 0.0 × 1 CR
(E)

UNDERWAY

This chapter discusses the operation of your boat from the beginning of a boating excursion to its end. We'd like to remind you to be kind to our environment while you're boating. Don't throw garbage and other refuse overboard. And do your best to keep harmful com pounds like gasoline and antifreeze out of the water.

Note: The term "engine" in this chapter means one or two engines depending on how your boat is equipped.

Note: If your boat is equipped with a carbon monoxide detector, it should be tested to determine that it is functioning properly every time you use your boat.

TRANSPORTING YOUR BOAT

Inspect your trailer regularly to make sure the side supports are in good working condition. Check bolts securing rollers and supports from time to time to make sure they are tight.

The trailer should be designed and built to carry the full weight of your boat, engine, and gear while providing support for the hull. Be sure not to overload your trailer by loading the boat with excess baggage, camping equipment, etc. Check the certification label on the frame of the trailer. It is required to show the gross vehicle weight rating. Be sure the total weight of your boat, engine, fuel, gear, and trailer does not exceed this rating. Make sure your towing vehicle has a hitch appropriate for the rating.

Distributing the weight on the trailer is important. Place the heaviest items at the bottom of the boat over a roller or chock, and secure them to keep them from shifting.

Balancing the load on the trailer is also important. If too much weight rests on the hitch, the towing vehicle will oversteer, a condition that causes the front end of the vehicle to sway. Conversely, too little weight on the hitch causes the trailer to fishtail. In both cases, the vehicle will be difficult to handle and at higher speeds the swaying or fishtailing can become uncontrollable and result in personal injury and damage to the boat, trailer, or towing vehicle.

Weight on the hitch, or tongue weight, should be 5% to 10% of the total weight of the loaded trailer to avoid overloading the tow vehicle and to provide adequate pressure on the hitch ball. If the weight of the loaded trailer is 2000 pounds, the weight on the tongue should be between 100 and 200 pounds. A weight distributing hitch transfers portions of tongue weight to a point between the front and rear wheels of the towing vehicle and to the trailer wheels.

Important: Bumper hitches are not safe and are illegal in many states.

All trailers with a Gross Vehicle Weight Rating of 1500 pounds or greater are required by law to have brakes. (State laws may vary; be sure to check your state's requirements.) The brake system is usually completely self-contained on the trailer and no hook-up is required to the towing vehicle. Brakes are either drum or disc type. They work the same way as the brakes on a standard passenger vehicle, but the method of applying the brakes is different. Your Robalo or trailer dealer can explain how the brakes on your trailer work.

Make sure your boat is secure before towing it.

- Close all windows, hatches, and doors.
- Store equipment to keep it from shifting or falling.
- Remove and store convertible top if your boat is so equipped.
- Use a second safety chain to secure your boat's bow to the trailer tongue. Tie down the stern to the trailer.

⚠ WARNING

WARNING: Improper towing can result in an accident causing personal injury and equipment damage. Become familiar with towing instructions in owner's manuals and with warnings supplied with your trailer and towing vehicle.

Towing a boat requires extra caution by the vehicle's driver. Allow extra distance between vehicles. Obey speed limits. Some states have lower speed limits for vehicles with trailers. If you are traveling slower than other traffic, pull over when it is safe to do so and allow traffic to pass. As with all other aspects of owning and operating your boat, use common sense and good judgment.

If you do not have experience backing a trailer, practice before you get into a confined public or private launch site. Take your trailer to an open area and get accustomed to using it. If possible, take someone with you who knows how to back a trailer.

Steering a trailer while backing it up works the opposite of steering a car. If the trailer needs to go to the right, turn the steering wheel to the left and vice versa. Inexperienced backers tend to turn the wheel too far. Do not oversteer. Turn the wheel gradually until you get the feel of safe backing.

LAUNCHING AND LOADING

The handling of your boat and trailer at the ramp requires practice, skill and patience. With care and attention to the following tips, you can launch and relaunch your boat with relative ease.

Important: Typically a beam of 8 feet 6 inches allows you to tow without a special permit in most places. These boats are considered "trailerable" for this reason. Other boats have wider beams and are still "trailerable", but, in most cases you need a permit to do so. Check with your state on permit requirements before towing.

Roller Trailers – Launching

Here are some tips to remember when you are putting your Robalo boat in the water while using a roller trailer:

Important: Before launching your boat, make sure the transom drain plug is installed. If it is not installed, the bilge could fill water quickly.

1. Always prepare the boat for launching before you get to the ramp.

   - Stop in a launching prep area near the ramp that doesn't block traffic and remove your tie-downs, tilt up your engine or drive unit, replace your transom drain plugs, etc.
   - Do not disconnect the wiring harness, winch cable or boat bow safety chain until you are by the water, ready to launch. Winch and trailer unit should be locked.
   - You do not need to disconnect the electric trailer brakes before launching the boat. If you disconnect the electric trailer brakes, the trailer brakes will not work.
   - Store all loose gear properly.
   - Inventory your safety equipment.
   - Tilt drive unit up to clear the ramp.

2. Have someone at the ramp to give you directions. Slowly back the trailer down the ramp to the water. If there isn't a ramp available, use a solid area of ground to the shore, with a slope if possible. Avoid wet, soft sand. Always remember to launch your boat at a right angle to the shore.

3. When the boat's transom is in several inches of water:

   - Do not put your trailer wheels and brakes in the water if possible, especially in salt water. Tie a mooring line to the boat to help you control it in the water.

- Stop towing vehicle with manual transmission in gear or automatic transmission in PARK. Remember to turn off engine and set the parking brake.

- On average grade ramp, the rollers on your trailer will allow your boat to gently roll back into the water. Do not remove the boat bow safety chain or winch lock until the boat and trailer are located in "launch" position.

- Once in "launch" position, remove bow safety chain from the boat. Hold the winch handle securely, reverse the winch lock and begin unwinding the line. Unwind it slowly and carefully.

WARNING

WARNING: If the winch handle slips out of your hand, let it spin. DO NOT try to stop it

- Move boat down the trailer and into the water.

- If your boat doesn't immediately move, try unwinding about six inches of line, lock your winch and give the boat a push. Then unlock the winch and try again. Your boat should roll safely into the water.

- Tie boat to pier or secure appropriately.

- Pull you vehicle away and park it.

Important: After each launching, monitor the bilge periodically to assure against abnormal water intake. Do not leave a new boat unattended for at least 8 hours after its initial launching. A forgotten plug, a loose through-hull fitting, or faulty valve can easily cause swamping. Neither the boat nor the engine warranties cover engine or engine components damaged by abnormal bilge water accumulations.

Roller Trailers – Loading

When loading, always prepare for the procedure prior to reaching the ramp. If the ramp is busy, preparation will shorten the time it takes for you to get your boat out of the water.

Make sure your engine or drive unit is in the full position. Just as in the launching procedure, do not put your trailer wheels or brakes in the water, if possible. For the self-adjusting and centering rollers to work properly, they must not be too far under water.

Unlock your winch and unwind enough cable/strap to attach the hook to the bow eye of your boat. For safety, always keep at least three turns of cable/strap around the winch drum. Never let your cable/strap all the way out. Lock your winch before attempting to wind the cable/strap in.

Fasten the boat to the winch line and start winding. Strong wind and current can affect the automatic adjusting capability of your roller trailer, so be aware of those conditions while loading. Optional load guides can help you keep your boat centered in adverse conditions. Pull the bow eye tight to bow roller or vee block. Connect the boat bow safety chain and you are ready to drive to the loading/preparation area near the ramp to connect all other tie-downs, lighting or electric brake connections, etc.

Bunk or Custom Trailers—Launching

Here are some tips to remember when you are putting your Robalo boat in the water:

Important: Before launching your boat, make sure the transom drain plug is installed. If it is not installed, the bilge could fill water quickly.

1. Always prepare the boat for launching before you get to the ramp. Stop in a launching prep area near the ramp that doesn't block traffic and remove your tie-downs, tilt up your engine or drive unit, replace your transom drain plugs, etc.

2. Have someone at the ramp to give you directions. Slowly back the trailer down the ramp to the water. If there isn't a ramp available, use a solid area of ground to the shore, with a slope if possible. Avoid wet, soft sand. Always remember to launch your boat at a right angle to the shore.

3. Back the trailer down the ramp until there is enough water to make the boat float. Because the bunks generate more friction than rollers, you need to back the trailer further into the water.

- Tie a mooring line to the boat so you will have control once it is floating.
- Unfasten the boat bow safety chain. Hold the winch handle securely, reverse the winch lock and begin unwinding the line. Unwind it slowly and carefully.
- On an average grade, the bunks on your trailer will allow your boat to gently slip back and float into the water. If your boat doesn't immediately move, try unwinding about six inches of line, lock your winch and give the boat a push. Then unlock the winch and try again. If this doesn't work, you might try backing the trailer deeper, if possible.
- Care should be given when launching from trailers with bunks that are equipped with plastic-like materials. These materials make the bunk surfaces very slippery, and the boat may begin to unload as soon as tension is released on the winch cable/strap.

Bunk or Custom Trailers—Loading

When loading, always prepare for the procedure prior to reaching the ramp. If the ramp is busy, preparation will shorten the time it takes for you to get your boat out of the water.

You probably won't have to back the trailer into the water as far to load the boat as you did to launch it. In fact, the easiest way is to back your trailer up until the rear of the bunks is in the water. By not putting your trailer too deep in the water, your boat will actually center itself on the bunks about 1/3 to 1/2 the distance onto the trailer.

Connect the winch cable/strap to the bow eye of the boat. Lock your winch before attempting to wind the cable/strap in. Once your boat is aligned and is pulled firmly against the winch stand roller or vee block and your winch is in the locked position, connect the boat bow safety chain and you are ready to drive to the loading/preparation area near the ramp to connect all other tie-downs, lighting or electric brake connections, etc.

Common Cause of Boat Misalignment

If your boat doesn't sit level in the water or your bunks or rollers are not adjusted properly, you may have misalignment problems with your boat when loading. Basic correction procedures are as follows:

Correction Procedures:

Re-measure all roller assemblies that set in a line across from each other. Make sure the distance to each roller from the centerline of the trailer is equal. In other words, the left side of your trailer should be exactly the same as the right side. This is true of bunk or roller trailers.

If your boat keeps going to the port (left) side, remove the boat and loosen the U-bolts and/or the through bolts that clamp the roller assemblies on the stern (back) section of the trailer. Force each assembly to the right as if you were trying to turn the handlebars of a bicycle. Hold each assembly in this turned position and retighten the U-bolts and/or through bolts.

This repositioning of the roller assemblies should correct the misalignment of the boat on your trailer. If your boat goes toward the starboard (right) side, reverse the procedure.

Another common reason for boats not centering themselves is putting the trailer too deep in the water, which does not allow the trailer adequate time to center the boat. This is especially true on roller style trailers. Please Note: Make sure your trailer is not too deep in the water or the boat will float over the rollers and be difficult to load and center.

BOARDING YOUR BOAT

The U.S. Coast Guard requires that a capacity plate be affixed to all boats up to 20 feet long. This plate states the maximum load capacity. The plate shows persons and gear in pounds the boat will handle safely under normal conditions. The U.S. Coast Guard establishes these load capacity ratings. Overloading and improper distribution of weight are significant causes of accidents. Keep weight below maximum limits for safety in turbulent water.

Important: The presence of the capacity plate does not relieve the boat operator from the responsibility of using common sense or sound judgement. Turbulent waters and adverse weather conditions reduce the maximum load capacity rating of the boat.

When loading your gear on board your boat, remember to distribute the load evenly, keep the load low and do not overload. Always step onto the boat, never jump! Have someone on the dock pass your gear aboard. Secure all gear firmly so that it will not move or interfere with operation of the boat.

The way your passengers are seated and gear stowed in the boat affects your boat's performance. Passengers should board the boat one at a time and find a seat. Passengers should remain seated during loading of gear to maintain an even trim. Distribute your passengers and gear so that your boat is balanced side to side and front to rear (Figure 5.1).

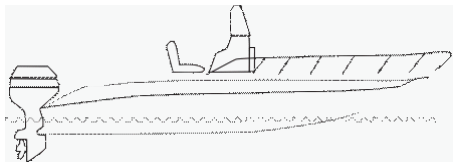

CORRECT Balanced load: gives maximum performance

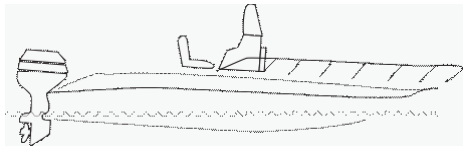

INCORRECT Overload forward: causes boat to "plow"

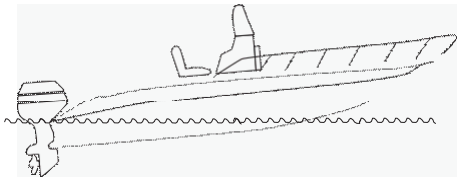

INCORRECT Overload aft: causes boat to "porpoise"

Figure 5.1 Boat Loading

As the operator, you are responsible for the safety of your passengers.

- Do not allow passengers to ride on the bow with feet hanging over the side.
- Do not allow passengers to ride sitting on the stern or gunwales. Falling from moving boats is a major cause of fatal recreational boating accidents.
- Do not allow passengers to sit in the bow rider area (if so equipped) while underway if doing so will obscure the operator's vision.

A shift in passenger weight changes the planing angle of the hull or the thrust of the propeller. This has the same affect on the boat as if the angle of the drive unit were changed. Minor deficiencies in your boat's ride can be quickly corrected by shifting passengers or gear forward or aft. By taking a little extra time to carefully place such gear as coolers, water jugs, tackle box, anchor, and tools, you create a more desirable trim. On planing-type boats, utilize stern loading in order to slightly raise the bow.

FUELING

Improper fueling procedures are the most common cause of boat fires.

⚠ WARNING

WARNING: Fuels with alcohol or alcohol derivatives can lead to hazardous leaks, fire or explosion. Do not use this type of fuel.

Before fueling your boat, check the entire fuel system for leaks. Check for weakening, hardening, swelling, or corrosion of fuel system components. These include the fuel tank, fuel lines and fittings, fuel filter, and carburetor. Any sign of leakage or deterioration requires immediate replacement before further engine operation.

Robalo Boats recommends using alcohol-free gasoline when possi- ble because alcohol tends to destroy marine fuel system hoses and other components. If only gasoline containing alcohol is available or if you do not know whether the gasoline contains alcohol, inspect the fuel system for leaks and abnormalities more frequently.

⚠ DANGER

DANGER: Fuel vapors are explosive and can become trapped within the lower portions of the boat. Close all hatches, windows, doors, and compartments while fueling your boat.

⚠ WARNING

WARNING: Do not smoke, extinguish all open flames, STOP engine and other devices that could cause sparks. Do not use electrical switches or accessories.

⚠ DANGER

DANGER: Fuel leaking from any part of the fuel system can lead to fire and explosion that can cause serious bodily injury or death. Inspect system before refueling.

Preliminary Procedures

1. Safely and securely moor your boat to the dock.

2. Turn off engine and all electrical equipment including lights, bilge pump, livewell, etc.

3. Extinguish all cigarettes, cigars, pipes, or other items that may produce a spark or flame.

4. Close all hatches, windows, doors, and compartments.

5. Make sure a fire extinguisher is readily available.

Fueling Procedures

1. Always fuel in an area which has sufficient lighting. Gasoline spills are hard to see when lighting is poor or it is dark.

Important: When fueling or having someone else fuel your boat, be sure a fishing rod holder is not mistaken for a fuel fill plate.

2. Your Robalo boat has fittings for filling the fuel tank. Remove fuel fill plate. Insert the fuel supply nozzle. Allow nozzle to stay in contact with fitting to prevent possible static-produced sparks.

Note: The fuel fill cap may have a built-in tank ventilation feature. If you should need to replace the cap, see your dealer for the exact same cap to ensure proper fuel system operation.

3. After pumping approximately 5 gallons of fuel into tank, inspect bilge and fuel tank area for any signs of fuel leakage. Continue fueling if you do not detect any leaks or other problems.

4. Allow space at the top of the tank for thermal expansion. Do not overfill tank so that fuel comes out fuel tank vent.

Note: Do not over fill tank, causing fuel to spill onto water.

5. If fuel can not be pumped in at a reasonable rate, check for a plugged fuel vent plug or kink in the line.

Post-Fueling Procedures

1. When you have finished fueling, replace fuel fill cap and wash off any fuel spillage around fuel fill area. Discard, in a safe place, any rags you may have used to wipe off fuel spills.

2. Open bilge compartment and all hatches, windows, doors and com-

partments closed during fueling. Inspect these areas for fuel fumes or fuel line leakage visually and by smelling. Check out any sign of fuel leakage or any indication of fumes and correct problem before starting the engine.

OPERATING YOUR BOAT

Starting the Engine

Important: Falls from moving boats are a major cause of fatal recreational boating accidents. Do not allow passengers to ride on the bow with feet hanging over the side or ride while sitting on the stern, gunwales, or seat backs. The Coast Guard considers these acts to be negligent or grossly negligent operation and prohibits them by law.

The following information is only a general guide. Chapter 3 has specific starting instructions for boats with battery selector switches. Detailed instructions are also in the engine owner's manual. Be sure to read and follow all of those instructions.

⚠ DANGER

DANGER: Carbon Monoxide Hazard! A cold engine pro- duces more carbon monoxide than a warm engine. Provide adequate ventilation in the cabin and cockpit to prevent exposure and reduce the possibility of carbon monoxide accumulation. Open all hatches, doors, windows, and side vents to increase air movement

1. Secure boat to the dock or mooring slip before attempting to start engine. Keep boat secure until engine is running and warmed up.

2. Check lubricating fluid levels. Check fuel supply and outboard oil to make sure you have enough fuel for your planned excursion.

3. Make sure the throttle is in the neutral position.

4. Start the engine. Refer to your engine owner's manual for recommended procedures for break-in, service, and other related operation.

5. Turn ignition key to START, pressing choke if required. Release key and allow to return to RUN after engine starts. If engine fails to start, wait one minute. Move throttle only once to maximum position then back to the neutral position. Try to start engine again.

Note: Transmission must be in neutral position before engine will turn over.

Important: Do not operate starter continuously for more than 15 seconds without pausing. Allow starter to cool at least three minutes between start attempts.

6. Warm up a cold engine by running it at fast idle speed (as recommended in engine manual) approximately one to two minutes.

Leaving the Dock

After the engine has warmed up, you are ready to leave the dock. Before you cast off, check all gauges for proper readings. Check the operation of the steering by turning the steering wheel to full port and to full starboard while observing engine movement. Check that charging system is working properly. Check again for fuel and oil leaks.

When you are sure your boat is ready, check wind, tide, current or other forces that will affect the way you maneuver your boat away from the dock. The cast off mooring lines and stow fenders.

Shift your boat's engine into forward or reverse depending on whether you want to move the bow or the stern away from the dock first. Move the throttle lever to neutral position. Then push forward quickly and firmly to shift into forward gear or backward to shift to reverse. Your engine should be running at a slow speed as you move away from the dock. If you move the bow out first, watch that the swim platform does not swing into the dock or a piling.

Getting Up To Cruising Speed

After slowly motoring from the dock area to open water, you can safely accelerate to cruising speed. Advance throttle to setting which provides your desired engine speed (RPMs). As you move the throttle forward, engine RPMs increase, and your boat moves faster through the water.

Important: Acceleration at full throttle is not recommended during the engine "break-in period." This "break-in period" coincides with the engine "20-hour check-up." Do not attempt full throttle acceleration during the first 20 hours of operation.

When you throttle up and accelerate, your boat increases the trim angle and causes the boat to ride bow-high. From a maximum angle, the boat levels out to its planing attitude as you continue to accelerate. (Figure 5.2)

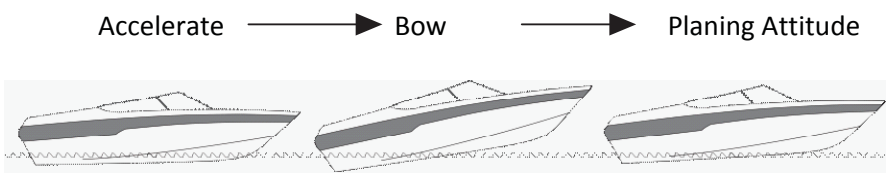

Figure 5.2: Boat Acceleration and attitude

The maximum angle is commonly known as the "hump." You should get over the hump as quickly as possible because visibility, handling, and performance are limited until you do. Only a few seconds at full throttle should be needed; however, the way your boat is loaded, the wind, and sea conditions affect the time required. When the boat gets over the hump, it reaches its planing attitude. Then, accelerate until your boat reaches a comfortable plane and then throttle down to cruising speed. This also provides for better fuel efficiency.

When maneuvering at low speeds you can reverse (move throttle forward or aft) the shift mechanism. This will react in a braking action.

Trimming Your Boat

Trim refers to the way a boat floats on the water. Your boat will work best when it is trimmed to run at an angle between 3 to 5 degrees to the water. You can trim your boat by shifting gear or passengers or, if your boat is so equipped, by adjusting the drive unit angle or the trim tabs.

Power Trim

⚠CAUTION

CAUTION: When shifting between forward and reverse, always pause in neutral for a few seconds before reversing the rotation of the propeller. This will prevent unnecessary damage to the drive system.

The operator can adjust this boat to the ideal boat angle for load and water conditions by trimming the drive unit (Figure 5.3). The power trim system allows the operator to adjust the drive angle while underway by changing the angle of the outdrive in relation to the boat's transom. It also allows the operator to raise and lower the drive for trailering, beaching, launching, or operation in shallow water.

Note: Refer to your engine manufacturer's owner's manual for information concerning maintenance and operation.

⚠CAUTION

CAUTION: High speed acceleration in reverse can create a wake that could wash over the transom and flood the boat.

Drive Angle

The drive angle of the boat is the relationship between propeller thrust to the planing surface of the hull's bottom. You can improve the performance of the same boat under varying conditions by adjusting the drive angle.

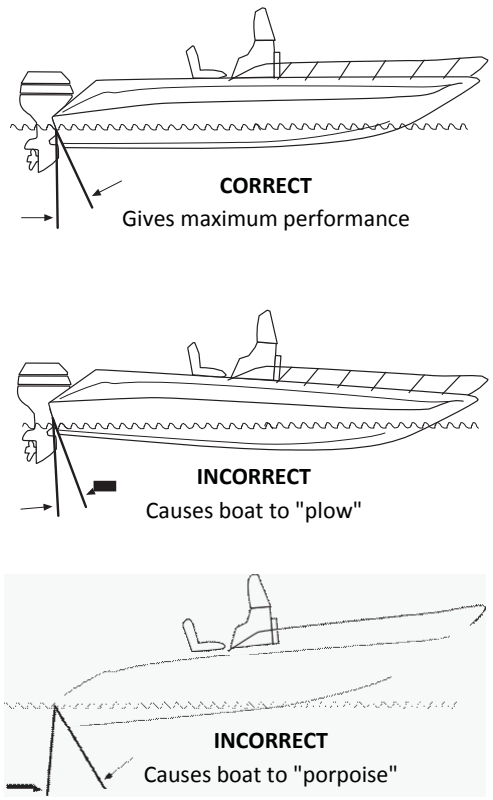

Figure 5.3 Trimming the Drive Angle

Moving the drive unit angle towards its innermost adjustment brings the propeller in as close as possible to the transom. The angle ofthe propeller causes an upward thrust which pushes the boat's bow downward as shown on Figure 5.3.

By gradually shifting the drive unit from its innermost adjustment towards the outermost adjustment, the propeller thrust pushes in a downward motion. This motion, the opposite of that shown in Figure 5.3, tends to lift the bow.

After reaching plane, under certain load conditions, your boat could have a tendency to bury its forward V-ed section. The boat will begin to plow and lose speed. If the water is choppy the boat will yaw. A boat will spin out if its bow is excessively buried. The only way to correct this situation is to increase the angle and swing the drive unit outward.

If the drive unit is angled out too far, your loaded boat will be sluggish in coming to plane. Once on plane, your boat will tend to porpoise. To correct this motion, move the propeller inward to decrease the angle between the drive shaft and the transom.

Very often, the optimum drive unit angle setting for the highest speed while carrying a light load will be just short of the porpoise point. However, such a setting is unsuitable when you have a heavy load or are pulling skiers. By reducing the drive angle, you will find it easier to maneuver.

WARNING

WARNING: Excessive trim decreases maneuverability, changes steering characteristics, and may cause "porpoising" (bow oscillates up and down) or "chine walking" (rocking side to side). Use power trim with care.

Trim Tabs

Trim tabs also help the operator trim the boat. Trim tabs are mounted on the port and starboard transom below the water line. The operator can control the trim tabs at the helm with rocker switches. (Figure 5.4) Pushing the switch activates the system which moves its tab up or down.

If the trim tabs are angled down, they cut into the water as it passes under the hull to force the stern up and the bow down (Figure 5.5).

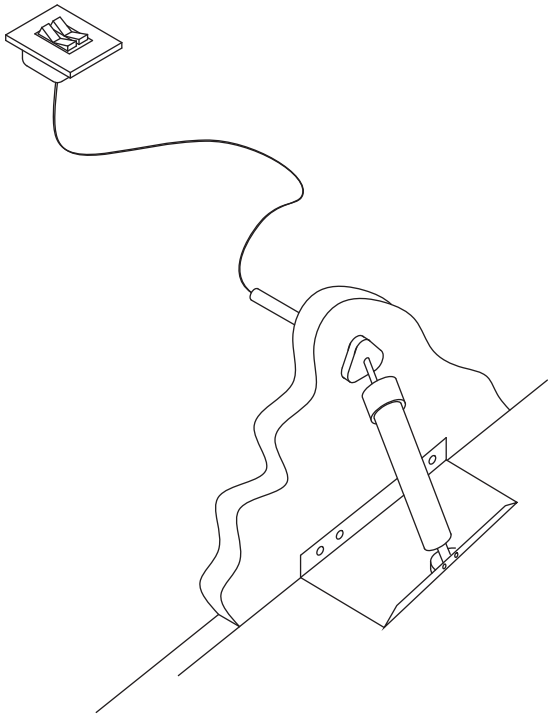

Figure 5.4 Trim Tab and Switch

Trim tabs also compensate for uneven loads in the boat by allowing the operator to trim up one side of the boat or the other.

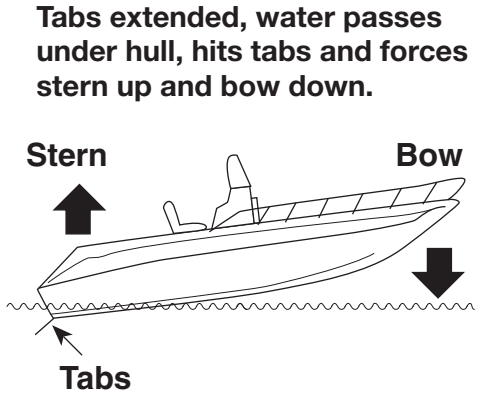

Figure 5.5 Trim Tab Operation

Lenco retractor feature

Lenco marine's trim tab retractor feature operates from either a 12v-24v signal or from an engine's analog tach signal. The purpose of the accessory signal input is to turn the trim tab control box on and off. When the control box is turned off, the trim tabs will retract.

Turn-on condition

When the Lenco accessory input is connected to either a 12v-24v signal or an analog tach signal, the control box turns on and the trim tab becomes active. At this time the boat operator can run the trim tabs up or down.

Turn-off condition

If the Lenco accessory input is connected to an analog tach signal, the control box will shut down when the tach signal is lost (i.e. engine stalls, stops). If the Lenco accessory input is connected to a 12v-24v source, the control box will shut down when the voltage source is removed.

Test mode

Lenco marine's trim tab system includes a test mode feature that allows the boat operator to by-pass the accessory input signal by holding down all four buttons on the key pad simultaneously for approximately three to four seconds. This will turn on the control box and allow the trim tabs to run up or down.

Once the control box is turned on in the test mode, the boat operator can turn the control box off by holding down all four buttons on the key pad simultaneously.

Important: If the control box is turned on in the test mode and subsequently receives a signal to turn it on via the accessory input, the boat operator can not turn off the control box by holding down all four buttons on the key pad. The box will only turn off by removing the signal from the accessory input.

Note: Refer to your engine manufacturer's owner's manual for information concerning maintenance and operation.

Stopping Your Boat

A boat has no brakes. Stop the boat by allowing it to slow down to less than 5 miles per hour and then putting the engine in reverse. Slowly increasing reverse power will allow you to stop the boat in a short distance. Remember that a boat does not respond to steering in reverse as well as it does when going forward.

⚠WARNING

WARNING: Check behind you before coming OFF plane. Many accidents occur each year as a result of a driver coming off plane while being followed by a boat that is unable to slow down in time to avoid collision.

Additional Underway Information

- Always be aware of local laws on noise limits. Noise means engine noise, radio noise or even yelling by people on your boat. Good seamanship demands that you operate your boat quietly so as not to infringe on the rights of others.
- You are responsible for any damage or injury caused by your boat's wake. Observe no wake speed zone warnings. Operate your boat with regard for the safety of other boats and people in your boating area.
- Keep your engine well tuned to decrease exhaust hydrocarbon emissions that pollute the air and water.

ANCHORING YOUR BOAT

Anchoring is necessary if you stop for recreation or an emergency. Practice anchoring techniques to make sure you know what to do when an emergency occurs. The size and weight of your boat govern the weight of the anchor and the diameter of the anchor line. Your Robalo dealer can help you select the proper anchoring equipment for your boat.

Use a burying anchor, such as a Danforth or plow anchor, which grips into the bottom and holds your boat secure. Holding power should be more important than weight. For anchoring in relatively quiet waters, you can use a mushroom anchor as an alternative.

The length of the anchor line should be six to eight times the depth of the water to ensure that the anchor bites into the bottom. The bottom end of the anchor line should be galvanized chain which holds up well as the line moves back and forth on the bottom. The rest of the line should be nylon anchor line which stretches to soften the impact of wind and waves on your boat.

Following are general guidelines for anchoring your boat:

- Secure the anchor line to the bow eye or deck cleat. Do not tie line to hardware not designed to support this stress.

WARNING

WARNING: Keep anchor secure while underway to prevent damage or injury if boat's attitude changes suddenly. If your boat has a power winch, do not use it as the primary source for securing anchor or anchor line. See the power winch instruction manual for details about proper operation and maintenance.

- Use two or more anchors if anchoring overnight or extended periods of time. Otherwise, make sure your boat has enough space to swing full circle in case of shifting winds.
- Keep the anchor and line in an area where it will be readily available in an emergency.

Dropping Anchor

1. Have a crew member carefully lower anchor, keeping a slight tension on the line as the anchor drops. Maintain tension after the anchor reaches the bottom. Simply throwing the anchor overboard usually fouls the line and requires starting over.
2. Maneuver the boat backwards slowly until the proper length of line is run out.
3. Fasten the anchor line around the bow eye or deck cleat.Anchor flukes should dig into bottom and hold boat in position.
4. Check shoreline landmarks at the time anchor is dropped and check again 30 minutes later. If position has changed, anchor is dragging and must be reset.

Weighing Anchor

Weighing, or pulling in the anchor, requires moving the boat in the direction of the anchor and pulling in the anchor as the boat moves. For this reason, the engines should be running. When the line is vertical, pull up firmly on the anchor line to free the flukes from the bottom. If the anchor remains stuck, feed out a few feet of line and attach it to the bow cleat. Maneuver the boat around the anchor, keeping the line taut, until you find an angle that will pull the anchor free.

Docking Your Boat

Important: When operating or docking in close quarters, maneuver your boat at idle speed. Proceed with caution in congested areas.

As you approach the dock or other mooring area, slow down your boat in time to allow your wake to subside before it reaches other boats or docks. As you get close to the dock, check for wind or currents, and allow them to carry the boat toward the dock if you can. When approaching, check that lines are attached to the cleats on the mooring side and that fenders are lowered on that side. Be sure fenders are at the proper height. If you can, have one person at the stern and one person at the bow, each with a boot hook and a mooring line attached to a cleat. Never approach a dock at a speed at which you would not want to bump the dock.

To dock a boat to the starboard side:

1. Approach at an angle approximately 45 degrees to the dock.
2. When the bow is within a few feet of the dock, bring the stern alongide the dock by turning hard to port.
3. Turn to starboard and, at idle speed, put the engine in reverse to bring the stern closer to the dock.

Reverse these steps to dock to the port side.

MOORING YOUR BOAT

When attaching mooring lines to deck cleats on your boat, make a loop in one end of the mooring line. Then, pass it through the hole in the base of the deck cleat. Next, pass the loop back over the deck cleat. The mooring line can now safely be used to secure your boat. Mooring lines may remain attached to the cleats on your boat while underway. The lines must be coiled and placed where they cannot get tangled in deck gear or the propellers.

When you tie up, run the mooring line from your boat around the dock cleat and then back to your boat. This enables you to untie the mooring line without leaving your boat. Just throw off one end of the mooring line and then bring the entire length of mooring line back into the boat. (Figure 5.6)

SHUTTING DOWN THE ENGINE

Following are general instructions for engine shutdown. Refer to your engine owner's manual for specific instructions.

1. Allow engine to idle so engine cools gradually.

2. Turn engine off.

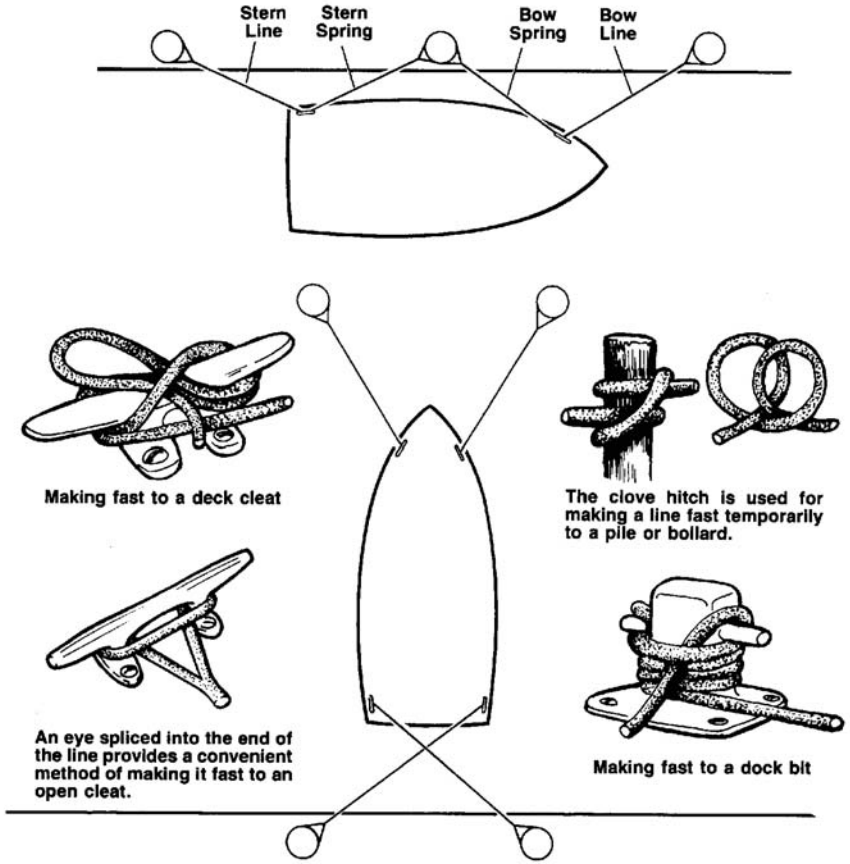

Figure 5.6: Mooring Lines

Note: Manila rope, the standard for many years is not as strong as some ropes made of synthetic materials. For mooring, its ability to stretch is an advantage, but it tends to shrink whenever it gets wet. Nylon rope is strong and elastic. Because of its elasticity, it works well for mooring lines and anchor lines. Rope made of high tensile strength polyester fibers like Dacron™ is just about as strong as nylon rope, but it does not stretch. Kevlar rope is strong and does not stretch, but it is quite expensive. Polypropolene rope tends to deteriorate rapidly when it is exposed to sun light. Because it floats, it is well-suited for use as a tow rope for water skiing. Use for other nautical purposes is not recommended.

PREVENTIVE MAINTENANCE AND REPAIR

Do not attempt any repairs on your boat unless qualified to do so. Only use approved marine replacement parts available from your Robalo dealer. Robalo recommends having an authorized Robalo dealer do your maintenance and repair work. Your dealer is qualified to make repairs or modifications to your boat in such a manner as to not compromise safety, design integrity, or warranty coverage. This chapter includes information you can use to do general maintenance and repair. If you choose to do your boat's maintenance and repairs, always refer to the product manuals for detailed information.

ENGINE

Refer to the engine owner's manual for detailed information about engine maintenance and repair. That manual has a maintenance and service schedule for the engine on your boat.

Checking the Oil (On 4-Stroke Models)

NOTE: During the engine 10-hour break-in period, or as recommended by the engine manufacturer, Robalo recommends that you check the oil level every two hours.

To check the oil:

1. Make sure boat is in the water and engine is stopped.
2. Put the outboard motor in an upright position (not tilted).
3. If engine is warm, let it cool for ten minutes to allow oil to drain back into the engine oil pan. This will make the check more accurate.
4. Pull engine oil dipstick out of its sleeve, wipe clean, and push dipstick back into the sleeve. Make certain the dipstick is pushed all the way back in.
5. Pull dipstick out again and check oil level on dipstick. The oil level must be between the ADD and FULL marks on the dipstick.
6. If oil level is at or below the ADD mark you must add oil.
7. Push dipstick back down into the sleeve. Be sure it is all the way in and properly seated.

Adding Oil

To add oil:

1. Remove oil fill cap.
2. Add oil as required to raise the oil level up between the ADD and FULL marks on the dipstick. Do not overfill.
3. Check oil level after adding oil.

NOTE: Robalo Boats recommends that you use a funnel when you add oil to prevent spillage and to help keep your engine free of surface grime and dirt.

Important: The Federal Water Pollution Control Act prohibits the discharge of oil or oily waste into or upon the navigable waters of the United States or the waters of the contiguous zone if such discharge causes a film or sheen upon or a discoloration of the surface of the water or causes a sludge or emulsion beneath the surface of the water. Violators are subject to a penalty.

Fuel Filter

WARNING

WARNING: Gasoline vapor explodes easily. Explosion is likely to cause fire and may burn you and damage your boat. Always STOP engine and do not smoke or allow open flames in area when changing filter.

Refer to your engine owner's manual for detailed information about checking and maintaining the fuel filter.

The engine exhaust system removes harmful gas created by the engine during combustion. Inspect the system for leaks before each use of the boat. Make sure all hose clamps and connections are tight and there are no cracks in any exhaust system component that would allow carbon monoxide gases to escape.

TUNE-UP

Tune-ups at recommended intervals keep your engine in top-notch operating condition and help assure the highest possible performance from your engine.

Refer to your engine owner's manual for detailed information.

FUEL SYSTEM

This information describes the fuel system excluding the engine. The fuel system provides a clean, continuous supply of fuel to the engine, in addition to helping prevent possible fire and explosion. All fuel systems installed at the Robalo factory meet federal requirements.

Note: Refer to your engine owner's manual for detailed information about checking and maintaining the fuel system.

The fuel system must be inspected frequently and maintained regularly. Check for leaks and/or vapors and repair any problems immediately. Keep fuel tank filled during the boating season to prevent moisture from condensing in the tank.

MONTHLY INSPECTION

Note: A trained marine mechanic should replace parts or repair the fuel system. See your Robalo dealer for parts and repair.

1. Starting at the fuel tank, check the entire fuel system for leaks or vapors.
2. Check fuel lines and hoses for wear, kinks, cracks, or deterioration.
3. Inspect fuel line fittings, carburetor, and fuel pump to make sure mounting brackets are tight.
4. Check fuel ventilation ducts and clamps for wear or damage.
5. Check fuel tank vent screens (located outside of hull) for any obstruction.

OUTBOARD DRIVE UNIT

Refer to the engine owner's manual for recommended frequency for checking drive unit and its oil.

CAUTION

CAUTION: Hot oil in operating drive unit can burn you. Do not remove oil vent plug immediately after using boat. Hot oil expands and flows rapidly from vent plug opening if oil vent plug is removed.

PROPELLERS

NOTE: Refer to the propeller manufacturer's manual for installation, removal, and further detailed information.

The propeller shipped with your boat is the size Robalo recommends for the best overall performance. However, factors such as altitude, temperature, load, bottom growth, and propeller condition can affect your boat's performance. Consult your Robalo dealer regarding your specific performance requirements.

Periodically check propeller for excessive wear and damage. Repair or replace, if required.

Steering System

Your boat has a hydraulic steering system, it needs periodic maintenance to be trouble free and safe. Regular checks of the complete system are essential.

Lubricate, inspect, and maintain system regularly.

1. Rinse off your steering cylinder thoroughly with fresh, clean water after each use.
2. Remove, clean and grease the support rod annually with quality marine grease.
3. Check the steering fluid level in the helm.
4. Replace any hoses showing signs of wear and remove the cause or re-route hoses.
5. Check fittings and seal locations for leaks, damage, and service as necessary

Consult your Robalo dealer regarding all repairs or replacement parts.

BILGE

Inspection

Check the bilge before you use your boat—every time! A small amount of water in the bilge is normal and not a cause for concern. If the amount of water is excessive, check for water leaks. Repair leaks immediately.

If the bilge is ever filled with fuel or oil, check engine, hoses, fuel tank(s), etc. for leaks. Repair immediately.

Important: Pumping fuel or oil overboard into the water violates the Federal Clean Water Act. Pump into suitable container and dispose of properly.

Cleaning

Run bilge until pump is dry. Remove all sand, silt, dirt, or foreign material. Make sure all limber holes are open and strainers are clean. Use bilge cleaner to remove any obvious oil stains.

⚠ WARNING

WARNING: Gasoline or vapors in bilge can explode. Remove all sources of ignition. Do not start engine, repair immediately.

Important: Never use any flammable solvents for cleaning the bilge. Check with your Robalo dealer for recommended cleaners.

TROUBLESHOOTING

The troubleshooting procedures listed in this chapter are designed to correct minor malfunctions for engine performance issues. Troubleshooting is a process of elimination. The troubleshooting chart displays areas that could be at fault and are presented in the order of probable occurrence.

Use good common sense and always refer to the manufacturer's Engine Owner/Service Manual. If the malfunction(s) appears too complicated or unsafe, contact your Robalo dealer. If underway, and contacting your Robalo dealer is not practical, contact the local marina for information regarding available marine mechanic service.

⚠CAUTION

CAUTION: Disconnect battery cables before performing all inspections, checks, and repairs to avoid possible personal injury and damage to equipment.

PROBLEM	CAUSE	SOLUTION
Engine will not crank (Ignition system)	1. Ignition fuse tripped 2. Neutral safety switch not making proper contact 3. Throttle lever in wrong position 4. Loose wire in starting circuit 5. Ignition switch defective 6. Defective solenoid 7. Dead battery 8. Battery switch in wrong position	1. Replace fuse on engine. 2. Have your Robalo dealer inspect throttle assembly. 3. Check position of throttle lever, ensure it's in the "neutral" position. 4. Tighten all wiring connections. 5. Test switch continuity. Replace switch as required. 6. Replace solenoid. 7. Recharge or replace battery. 8. Turn selector switch to battery on position.

PROBLEM	CAUSE	SOLUTION
Engine cranks but will not start (Fuel system)	1. Lack of fuel 2. Improper starting procedure 3. Clogged fuel filter 4. No fuel reaching carburetor (providing all fuel valves are open) 5. Engine flooded 6. Contaminated fuel 7. Spark plug(s) fouled or broken	1. Clean fuel filter, check fuel level; check anti-syphon valve, if equipped. 2. See Engine Owner/Service Manual to review starting procedure. 3. Check and replace fuel filter. 4. Check fuel pump, fuel pump filter, carburetor fuel filter, and fuel tank line for cracked flanges or restricted fittings. 5. Do not attempt to start engine for at least 5 minutes. For hot engine, fully advance throttle, (make sure throttle lever is in neutral) and crank engine. 6. Inspect for water or other contaminants in fuel. If contaminated, drain tank and flush with fresh fuel. 7. Clean, adjust gap, or replace.
Low cranking speed	1. Loose or dirty electrical connections or damaged wiring 2. Bad battery 3. Engine oil too heavy for prevailing temperatures	1. Check all related electrical connections and wires. 2. Test battery (See Engine Owner/Service Manual). 3. Drain oil and refill with correct grade and viscosity oil (See Engine Owner/Service Manual).
Starter will not crank engine(s)	1. Discharged battery 2. Corroded battery cables 3. Loose connection in starting circuit 4. Defective starter switch 5. Starter motor brushes dirty 6. Jammed "starter drive"	1. Charge battery. 2. Clean battery terminals. 3. Check and tighten all connections. 4. Replace switch. 5. Clean or replace brushes. 6. Loosen starter motor, then free stuck gear.

PROBLEM	CAUSE	SOLUTION
Poor acceleration	1. Accelerating pump 2. Throttle not fully open 3. Ignition or carburizing 4. Air intake obstructed 5. Engine overheating	1. Replace. 2. Inspect cable and linkages for binding, obstructions, or loose fasteners. 3. Service ignition system and carburetor. 4. Check air intake. 5. Check engine temperature (See Engine Owner/Service Manual).
Engine runs but misfiring	1. Fouled spark plug(s) 2. Wet spark plug wires 3. Loose ignition wires 4. Defective fuel pump 5. Partially clogged fuel filter 6. Incorrect carburetor mixture 7. Contaminated fuel	1. Remove, clean, or replace. 2. Wipe dry, inspect and replace damaged wires. 3. Inspect all wire connections. 4. Repair or replace as required. 5. Clean or replace fuel filter. 6. See Engine Owner/Service Manual for proper carburetor adjustment. 7. Drain fuel tank, flush clean and replace fuel filter.
Excessive fuel consumption	1. Faulty fuel pump 2. Spark plugs bad or set improperly 3. Incorrect timing	1. Repair or replace as required. 2. Clean and set or replace spark plugs 3. Time engine.
Blue exhaust smoke	1. Lube level too high 2. Oil too thin 3. Oil overheated	1. Drain off excessive oil. 2. Drain and replace oil (See Engine Owner/Service Manual). 3. Check cooling system.
White exhaust smoke	1. Engine misfiring 2. Spark plugs dirty or not gapped correctly	1. See Engine Owner/Service Manual. 2. Clean, adjust gap, or replace.
Low oil pressure	1. Insufficient oil in crankcase 2. Excessive oil in crankcase	1. Check and add correct grade and viscosity oil. Visually check engine for leaks. 2. Check and remove required amount of oil. Check for cause of excessive oil (improper filling, bad fuel pump, etc.).

PROBLEM	CAUSE	SOLUTION
Low oil pressure (con't)	3. Diluted or improper grade and viscosity oil 4. Oil leak in pressure line	3. Change oil and oil filter; be sure to use the correct grade and viscosity oil. 4. Inspect all oil lines and tighten all connections as necessary.
No oil pressure	1. Defective gauge, gauge tube, or oil line 2. No oil in engine	1. Replace gauge, or tube, and tighten or replace line as necessary. 2. Fill with proper grade and viscosity oil (See Engine Owner/Service Manual).
High oil pressure	1. Too heavy grade of oil 2. Dirt or obstruction in oil line	1. Drain oil and replace with proper grade (See Engine Owner/Service Manual). 2. Drain and clear oil system. Check for bent or flattened oil lines and replace as required.
Knocking or pinging	1. Incorrect type fuel 2. Incorrect timing 3. Pre-ignition 4. Overheated engine 5. Cooling system trouble	1. Drain tank and replace with proper fuel. 2. Time engine (See Engine Owner/ Service Manual). 3. Clean or replace spark plugs; check engine timing. 4. Check engine cooling system. 5. Check water intake for blockage.
Rough running	1. Faulty fuel pump 2. Idle speed too low 3. Faulty ignition system components 4. Clogged fuel filter 5. Contaminated fuel	1. Refer to Engine Owner/Service Manual for fuel pump testing procedures. 2. Check idle speed and adjust. 3. Service ignition system (See Engine Owner/Service Manual). 4. Replace fuel filter. 5. Inspect fuel for water or other contaminants. If contaminated, drain tank and flush with fresh fuel.

PROBLEM	CAUSE	SOLUTION
Rough running (con't)	6. Kinked or clogged fuel lines, or fuel tank vent line	6. Use compressed air, at not more than 20 psi, to blow-out obstruction. Replace line if kinked. **WARNING** WARNING: Wear protective eye wear when performing compressed air cleaning.
	7. Air intake obstructed	7. Check air intake.
Engine overheating	1. Bad sending or receiving unit 2. Loose wiring connections at sending or receiving unit 3. Worn or broken impeller in sea water pump 4. Clogged oil cooler 5. Exhaust lines plugged 6. Ignition timing late 7. Restricted water intake	1. Replace unit(s). 2. Tighten all connections. 3. Replace impeller. 4. Remove obstruction. 5. Remove obstruction. 6. Time engine. 7. Clean water intake.
Sludge in oil	1. Infrequent oil changes 2. Dirty oil filter	1. Drain and refill with proper grade and viscosity oil. 2. Replace oil filter.
Poor Performance	1. Damaged or improper propeller 2. Excessive water in bilge area 3. Boat overloaded or improper distribution of load 4. Fouled or damaged hull bottom	1. Inspect propeller and replace if required. 2. Pump out bilge area. Inspect for causes related to excess water. 3. Reduce load or redistribute load. 4. Inspect, clean, or repair as required.
Vibration	1. Loose engine mounting bolts 2. Damaged propeller shaft 3. Propeller bent or pitch out of true	1. Inspect and tighten as required. 2. Replace shaft. 3. Inspect propeller and replace as required.

INTERIOR AND EXTERIOR CARE

The following information will help you keep the interior and exterior of your boat in tip-top shape. If you need more specific information, contact your Robalo dealer.

Note: Before you use a particular cleaning solution or method, test the material to be cleaned in a hidden or inconspicuous area for possible adverse reactions. Use cleaning agents sparingly. Never discharge cleaning solutions into the waterways. Do not use products containing phosphates, chlorine, solvents, or nonbiodegradable or petroleum based products.

FIBERGLASS AND GELCOAT

The hull and deck are made of fiberglass. The outer layer of the hull and deck is a color pigmented polyester resin, called gelcoat. Gelcoat is highly resistant to scratches that occur during normal boat use. Nevertheless, during the life of your boat, some damage to the gelcoat is bound to occur.

Gelcoat Maintenance

To remove and prevent the buildup of most salt, soil, and grime, clean the hull and deck regularly with household detergent and water.

Note: Make sure household detergent does not contain ammonia or chlorine. Because ammoniate or abrasive cleaners dull and discolor the gelcoat surface, they are not recommended for routine maintenance.

Gelcoat surfaces are very resistant to deep stains. To remove minor stains, wash the affected area with a soft cloth and household detergent. Then rinse thoroughly with clear water. If deep stains do occur, use a special fiberglass cleaner and stain remover.

Waxing the gelcoat surface regularly will help prevent soiling and preserve its luster. Robalo recommends a fiberglass wax that fills the gelcoat pores. Chemicals in fiberglass wax screen out harmful ultraviolet rays that cause fading of the gelcoat color.

⚠CAUTION

CAUTION: Waxed gelcoat is slippery. Falls causing bodily injury or falls overboard are possible. Never wax deck surfaces that require sure footing.

Repairing Gelcoat Damage

Minor Scratches

Repair minor scratches with automotive rubbing compound or polishing wax. Follow the manufacturer's instructions. Although the scratches may not disappear completely, they should not be as noticeable. Apply rubbing compound or polishing wax to a damp, soft cloth. Rub the gelcoat surface with the damp, soft cloth in a circular motion.

Chips, Hairline Cracks, and Small Patches

Your Robalo dealer has qualified personnel capable of making this type of repair.

Robalo uses the finest gelcoats and resins available to prevent gel- coat crazing and hairline cracks. Over time your boat may develop slight hairline cracks in the outermost gelcoat layer. These usually do not damage the structure of your boat or affect its integrity.

HULL BOTTOM MAINTENANCE

If your boat will be in water continuously for the majority of the boating season, Robalo recommends sealing the hull bottom with a high quality barrier coating. Repairing water blister damage is not covered under the Robalo Boat Warranty. Your Robalo dealer can recommend the best barrier coating product for your boat.

Never use wire brushes, scouring pads, or other abrasive materials or solutions on the bottom surface of your boat. They cause small scratch marks that will collect dirt, silt, sand, marine growth and other foreign materials.

Keep the hull bottom of your boat clean. Checking it regularly for any signs of excessive wear or damage. Make needed repairs to the hull bottom as soon as possible. Accumulation of natural coatings from water and marine growth can create drag and limit the efficiency of your boat.

BOTTOM PAINT (ANTI-FOULING)

Important: Consult your Robalo dealer for recommended bottom paints and local laws that govern your area. Many states regulate the chemical content of bottom paints to meet environmental standards and regulations.

Anti-fouling bottom paint is designed to prevent marine growth by dissolving slowly. As a result, the bottom of your boat will usually need painting after the boating season. Some variables to consider when selecting a protective bottom paint are the water temperature, water pollution, salinity, current, and organic matter in the water. To protect and repaint the boat bottom, perform the following:

- Remove boat from water once a year. Scrub bottom with a soap and water solution and a bristled brush.

Note: Repainting the bottom is not necessary each time the bottom is scrubbed, as long as no bare areas are visible in the bottom paint.

- Sand entire bottom surface of the boat.
- Fair (smooth out) all rough areas as required.
- Clean bottom surface to remove all dust and foreign materials.
- Make sure bottom surface is completely dry.
- Apply new coat of bottom paint.

Allow new bottom paint to dry 24 to 36 hours. Never attempt to haul, paint, and launch on the same day.

DECK HARDWARE AND FITTINGS

Note: Always follow the manufacturer's recommendations (found in your owner's packet) for cleaning and maintaining deck hardware and fittings. These recommendations include the proper cleaning methods and cleaning agents.

Inspection

Inspect hardware and fittings to make sure they are tight. All screws, bolts, clamps, cleats, etc., should be secure.

Cleaning and Care

- Always clean stainless steel frequently with soap and water. Any cleaner safe for glass is usually safe for stainless steel.
- Always remove rust spots as soon as possible with a brass, silver, or chrome cleaner. Irreversible pitting will develop under rust that remains on stainless steel for any period of time.
- Always use a cleaner, like a good car wax, for added beauty and protection.
- Never use coarse abrasives like sandpaper or steel wool on stainless steel. These may actually cause rusting.

- Never clean with mineral acids or bleaches.
- Never leave stainless steel in contact with iron, steel, or other metals which cause contamination leading to rust or corrosion.

WINDSHIELD AND PORTHOLE

Clean windshield safety glass with a glass cleaner or ammonia water; then rinse with plenty of clear water.

Important: Solvents can penetrate glass or porthole surfaces and cause hazing. Hazing obstructs visibility. Never use acetone, benzine, carbon tetrachloride, lacquer thinner, or similar solvents to clean glass or portholes.

The canvas or weather covering windows are made of a synthetic material. Wash any Plexiglass, clear vinyl or other synthetic materials with a mild detergent or dishwashing liquid and water solution, then rinse with plenty of clear water.

When stowing plastic or vinyl windows, be sure they are dry. Make sure the vinyl is rolled and not folded or creased. Store them in a bag that will breathe.

CARPET

After a boating excursion, allow carpet to dry completely in the sun to prevent mildew.

Snap in carpet should be rolled and stored prior to trailering boat as damage may occur if left during transportation.

Vacuum carpeting frequently. Clean up spills as quickly as possible. Remove spots before they dry. Clean indoor/outdoor carpet with a mild detergent or dishwashing liquid and warm water solution and a scrub brush. After cleaning, thoroughly rinse carpet with clear water. Your owner's packet has more detailed information provided by the manufacturer. Follow the manufacturer 's recommendations for cleaning and stain removal.

SEAT COVERINGS AND VINYL

Because seat coverings and trim are made of expandable vinyl, extreme temperatures have little effect on them.

Note: Follow the manufacturer's recommendations (found in your owner's packet) for cleaning and seat covering and removing stains. These recommendations include the proper cleaning methods and cleaning agents.

Care

Place removable exterior cushions inside the boat when they are not in use.

Cleaning

Remove stains as soon as possible to eliminate any possible reaction between the staining agent and the vinyl. Wipe away dirt and smudges with mild soap and warm water. If additional cleaning is required, scrub with a soft bristle brush to remove dirt from textured patterns. Dry with a soft, lint-free cloth or towel.

Follow manufacturer's instructions closely. Never use steel wool, powdered abrasive cleaners, or bleaches. They will mar the surface and leave an unsightly appearance.

Never use bleaches or solvents of any kind on monogram parts. Use mild soap and water only. Bleaches and solvents will cause monogram to fade.

To store cushions onboard boat for winter or extended periods of time, open zippers and elevate cover away from foam padding. Place a small rounded object (for example, a plastic bowl) inside to allow for air circulation.

CANVAS (WEATHER COVERINGS)

The canvas, or weather coverings, are 100% acrylic yarn. Besides its resistance to mildew, rot and weather, canvas also resists industrial pollutants and the effects of ultraviolet light from the sun.

Care

- Keep the top up when boat is not in use or when it's raining. Never trailer your boat with the canvas up. None of the canvas or covers supplied with your boat were designed for the stress of highway speed trailering, and to do so may damage the canvas.
- Keep canvas clean. Acrylic fabric will not support mildew growth, but dirt and dust on the canvas will.
- Lubricate zippers with paraffin and snaps with petroleum jelly.
- If canvas or seams leak, apply a light coating of a fluorocarbon based water repellent, or "303 High Tech Fabric Guard," available at most marine dealers.
- Allow all canvas to air dry before storing. Never store canvas damp or wet. Provide proper ventilation to limit the possibility of mildew.
- Avoid mooring under trees.
- Do not tow your boat with the top in the raised position.
- Be careful not to scratch clear vinyl windows. Dry well before stowing. When stowing clear vinyl, make sure the vinyl is rolled and not creased.

Cleaning

- Wet down all canvas material. Scrub with a soft bristle brush and a solution of mild soap and water. Never use a detergent or bleach on your canvas.
- Brush or sweep the underside of the top. Spray with Lysol or other disinfectant to prevent mildew.

CABIN CUSHIONS, SIDE CURTAINS AND FABRICS

Clean interior cabin cushions with a foam type cleaner. Follow all instructions as recommended by the product manufacturer. Dry clean all side curatins and fabrics, other than vinyl.

WINTERIZING AND STORAGE

This chapter tells you how to winterize and store your Robalo boat in regions where temperatures fall below freezing. If you keep your boat in an area not requiring winter storage, Robalo recommends you perform an annual inspection, similar to the preparation for storage as indicated in this chapter. With proper care, you will have many years of enjoyable boating with your Robalo boat.

LIFTING THE BOAT

⚠WARNING

WARNING: Lift slings may slip on the hull and result in serious injury or death from dropped load. Exercise extreme caution if in the vicinity of such activity. If possible, slings should be tied together before lifting.

Unless your boat is trailerable, have your dealer or qualified marina personnel lift your boat out of the water for you. Each boat has main frame components designed to support the boat when it is being lifted out of the water. Severe gelcoat crazing or more serious hull damage can occur if the lifting slings exert pressure on the gunwales. Flat, wide belting-type slings should be used. Don't use cable-type slings. The spreader bar at each sling should be as long as the distance across the widest point the sling surrounds.

- Never hoist the boat with more than a minimal amount of water in the bilge.
- Before lifting the boat, empty fuel and water tanks, especially if they have large capacities.
- Do not use deck cleats or bow or stern eyes for lifting the boat.
- Be sure boat remains level while being lifted to avoid sling movement or boat damage.
- If using any boat lifting device other than slings, position lifting device so as not to put pressure on any underwater hull component including trim tabs.

Cradle

A cradle is the ideal support for your boat whenever it is not in the water. Properly designed and located, the cradle will support the boat under the main frames. Support at these points is essential for preventing damage to the hull. Purchase a cradle from your dealer to ensure that your boat has the correct support.

DRY STORAGE AND PREPARATION

Note: Refer to Chapter 8, Interior and Exterior Care, for specific cleaning solutions and procedures.

Deck

- Wash the deck and walkway surfaces.
- Clean all deck hardware, and apply a coat of rust inhibitor.
- Clean the indoor/outdoor carpet.

Hull

- Scrape off any barnacles or crusted marine growth.
- Scrub hull thoroughly to remove marine growth, scum and loose bottom paint.

- Inspect underwater gear and propeller for excessive wear or damage.
- Apply fresh coat of bottom paint.
- Remove hull drain plug; store it in a safe place. Allow bilge water to drain, raise bow of boat during period of storage.

General Housekeeping

- Clean boat interior including all cabinets and drawers.
- Remove all cushions, mattresses, curtains, blankets and sheets, pillows, towels and linens, clothing, and any other items that can hold moisture and cause mildew.

Note: Leave mattresses and cushions onboard only if air can circulate around them.

- Lay all cushions with plastic substrates flat.
- Make sure cabin is well ventilated.
- Check for adequate air circulation around life jackets and other safety equipment left onboard.
- Clean and dry bilge. Remove any materials such as rags, sponges, or other cleaning material.
- Weather permitting, open all doors, hatches, portals, and windows to air out the interior for a day or two.
- If covering boat while in storage, use a cover constructed of fabric that allows for plenty of ventilation.

SYSTEMS AND COMPONENTS

In regions where temperatures fall below freezing, winterization of the systems and components is necessary. Failure to do so will seriously damage them. They include, but are not limited to: generator, air conditioner, strainers, hot water heater, sump pump, Porta-Potti, head, holding tank, water tank, sewer system, and water systems. Refer to the owner's manual for each component or system listed above for detailed information on winterization.

Note: Robalo strongly recommends having a qualified dealer perform winterization procedures for your boat.

ENGINE

Important: In regions where temperatures fall below freezing, winterizing your engine may be necessary. Failure to do so will seriously damage the engine. Refer to your engine owner's manual for detailed winterization information.

Change engine oil before storing your boat. Refer to the instructions in your engine owner's manual.

FUEL SYSTEM

Add a gasoline stabilizer solution to the fuel tank. Follow the product manufacturer's recommended procedure.

BATTERY

Remove battery from boat and store battery in a cool dry place away from freezing temperatures.

⚠ WARNING

WARNING: Battery electrolyte can cause severe eye damage and burn your skin. Wear goggles, rubber gloves and a protective apron when working with battery. If electrolyte spills, wash area with a solution of baking soda and water.

- Cover battery terminals with rubber or plastic caps to prevent accidental contact between battery posts and metal objects.
- Clean outside battery case, terminals, and battery clamps with a baking soda and water solution. Do not allow solution to enter battery cells.
- Clean battery posts and clamps with fine grit emery cloth. Use a light sanding motion when cleaning.
- Apply a light coat of petroleum jelly to cover end of battery cables.
- Recharge battery monthly or trickle charge continuously while battery is stored.

RECOMMISSIONING

NOTE: For detailed information on recommissioning your boat's systems and equipment, refer to the owner's manual for each system or component.

1. Inspect, visually and by smelling, the fuel system and all associated components for proper connections, wear, leaks, or other damage and needed repair.

Important: Inspection of the fuel system at recommissioning is very important. We cannot overemphasize our concern for your safety.

2. Clean battery terminal posts with wire brush or steel wool before reinstallation.
3. Check charge on battery. Recharge or replace if necessary.
4. Inspect all battery wiring. Repair or replace if necessary.
5. Attach battery cables, and tighten cable clamps.
6. Apply petroleum jelly or marine grade grease on battery posts and clamps to eliminate air pockets and possible acid buildups.
7. Reinstall hull drain plug after coating threads with petroleum jelly.
8. Clean bilge area.
9. Inspect all wiring for fraying, wear, loose connections, or other damage. Repair or replace if necessary.
10. Test operation of navigation lights and other lighting onboard. Inspect all switches, controls, and other related equipment for proper operation. Repair or replace as necessary.
11. Inspect all life jackets, anchor lines, and other safety equipment for proper operation and physical condition. Repair or replace if necessary.

NAUTICAL GLOSSARY

Abaft	Toward the stern.
Abeam	Amidships, at a right angle to the keel.
Aboard	On, in, or into a boat.
ABYC	American Boat and Yacht Council, Inc., the organization that sets voluntary safety and construction standards for small craft in the USA.
Adrift	Without motive power and without anchor or mooring.
Afloat	On the water.
Aft	Describing the after section of a vessel, or things to the rear of amidships and near the stern.
Aground	Touching bottom.
Amidships	In the center, the center portion of a vessel.
Anchor	A forging or casting shaped to grip the sea bottom and, by means of a cable or rope, hold a boat in a desired position.
Anchorage	A customary, suitable and (usually) designated harbor area in which vessels may anchor.
Astern	Toward the stern. An object that is aft of a boat is said to be astern of the boat.
Athwart	Across.
Aweigh	Off the bottom, said of an anchor.
Aye	Yes, while aboard a boat or ship. Means "I understand."
Bail	To remove water from a boat by pump or bailer.
Ballast	Heavy material such as iron, lead, or stone placed in the bottom of the vessel.
Beacon	A post or buoy placed over a shoal or bank to warn vessels, also a signal mark on land.
Beam	Imaginary line amidships at right angles to keel of vessel. Also vessel's maximum width.
Bearing	The direction or point of the compass in which an object is seen.
Belay	To make fast to a cleat or belaying pin; to cancel an order.
Below	Beneath, or under, the deck. One goes below when going down into the cabin.
Bend	To fasten by means of a bend or knot.
Berth	A position, as a place to sleep or in which a vessel maybe made fast; a margin of safety, as "a wide berth."
Bilge	The lower internal part of a boat's hull.
Bollard	A strong post for holding lines fast.

Bow	The forward part or front of the boat.
Breakers	Waves cresting as they reach shallow water, as at or on a beach.
Breakwater	A structure, usually stone or concrete,built to create a harbor or improve an existing one.
Bulkhead	Vertical partition in a boat.
Burdened Vessel	Former term for the vessel which must stay clear of vessels with the right-of-way.
Caulking	Forcing filler material into the seams of the planks in a boat's deck or sides, to make them watertight.
Camber	The arch of a deck, sloping downward from the center toward the sides.
Capsize	To turn over.
Carburetor Backfire Flame Arrestor	Required equipment on all motorboats except outboards and diesels. Reduces chance of fire caused by backfires in internal combustion engines.
Cardinal Points	The four main points of a compass; north, east, south, and west.
Ceiling	The inside lining of the hull.
Certificate	Government paper, such as a boat's license.
Chart	A map of a body of water that contains piloting information.
Chine	The intersection of sides and bottom of a boat.
Cleat	A piece of wood or metal with projecting ends to which lines are made fast.
Clinker	A method of planking in which the lower edge of each strake overlaps the upper edge of the strake next below. (Also called lapstrake.)
Coaming	A raised edge, as around part or all of a cockpit, that prevents seawater from entering the boat.
Coast Guard	The federal marine law enforcement and rescue agency in the US.
Cockpit	A well or sunken space in the afterdeck of a small boat for the use of the helmsman and crew.
Companionway	A hatch or entrance, from deck to cabin.
Compass	The instrument which shows the heading of a vessel.
Cowls	Hooded openings used for ventilation.
Cradle	A frame used to support a vessel on land.
Current	The movement of the water in a horizontal direction.
Deadrise	The rise of the bottom of a midships frame from the keel to the bilge.
Deck	Any permanent covering over a compartment.
Deep-six	To discard or throw overboard.

Depth Sounder	An electronic depth-finding instrument, measuring the time a sound wave takes to go from the vessel to the bottom and return, then displaying the result in feet, fathoms, or meters.
Dinghy	A small, open boat.
Displacement Hull	Type of hull that plows through the water even when more power is added.
Dock	An enclosed or nearly enclosed water area; all the port installations; a place where vessels can moor, as a pier, wharf, or floating dock.
Documented Vessel	Vessel registered with the U.S. Coast Guard.
Dolphin	A small group of piles, in the water, generally used for mooring or as a channel marker.
Draft	The depth of the vessel below the water line, measured vertically to the lowest part of the hull.
Dunnage	Mats, boughs, pieces of wood, or other loose materials placed under or among goods carried as cargo in the hold of a ship to keep them dry and to prevent their motion and chafing; cushioning or padding used in a shipping container to protect fragile articles against shock and breakage; baggage or personal effects.
Ebb	An outgoing tide.
Estuary	An inlet or arm of the sea.
Fathom	Six feet.
Fenders	Objects placed along the side of the boat to protect the hull from damage.
Flare	The outward spread of the boat's sides from the waterline to the rail at the bow. Also, a pyrotechnic signalling device that can indicate distress.
Fore	Used to distinguish the forward part of a boat or things forward of amidships. It is the opposite of aft or after.
Forward	Toward the bow.
Frame	Ribs of the hull, extending from the keel to the highest continuous deck.
Freeboard	The vertical distance measured on a boat's side from the waterline to the gunwale.
Galley	The kitchen area of a boat.
Gimbals	Swivels used to keep equipment level.
Give-Way Vessel	The one which must stay clear of vessels which have the right-of-way.
Grab Rail	A convenient grip, on a cabin top or along a companion ladder.
Gunwale	The upper edge of a boat's side. (pronounced gunnel.)
Harbor	A safe anchorage, protected from most storms; may be natural or man-made, with breakwaters and jetties; a place for docking and loading.

Hatch	An opening in a boat's deck for persons or cargo to go below.
Head	A marine toilet.
Headway	Forward motion of a vessel through the water.
Helm	The wheel or tiller by which a ship is steered.
Holding Tank	Storage tank for sewage, so that it will not be pumped overboard into the water.
Hull	The body of a boat.
Hypothermia	A physical condition where the body loses heat faster than it can produce it.
Inboard	More toward the center of a vessel; inside; a motor fitted inside the boat.
Inland Rules	Rules of the road that apply to vessel operation in harbors and certain rivers, lakes, and inland waterways.
Intracoastal Waterways	ICW: bays, rivers and canals along the coasts (such as Atlantic and Gulf of Mexico coasts), connected so that vessels may travel without going into the open sea.
Jetty	A structure, usually masonry, projecting out from the shore; a jetty may protect a harbor entrance.
Keel	The permanently positioned, fore-and-aft backbone member of a boat's hull.
Knot	To bend a line. Also, a unit of speed equal to one nautical mile (6,076.10 feet) an hour.
Launch	(1) To put a vessel into the water; (2) a small open powerboat, mainly used for transportation between a vessel and shore.
Lee	The side opposite to that from which the wind blows.
Leeward	Situated on the side turned away from the wind. (Opposite of windward.)
Leeway	The amount a boat is carried sideways by the wind's force or current.
List	(1) A continuous leaning to one side, often caused by an imbalance in stowage or a leak into one compartment; (2) A light list is a printed listing of aids to navigation, in geographical order.or inclining of a vessel toward the side.
LOA	Length over all; the maximum length of a vessel's hull, excluding projecting spars or rudder.
Locker	A storage place, a closet.
Log	A record or diary of a vessel's journey.
Lubber's Line	A mark or permanent line on a compass that shows the course of the boat.
Making Way	Making progress through the water.
Marina	A place, essentially a dock area, where small recreational craft are kept; usually floats or piers, as well as service facilities, are available.

MAYDAY	A radio distress call, from the french m'aidez (help me); SOS in Morse Code.
Mooring	Commonly, the anchor chain, buoy, pennant, etc., by which a boat is permanently anchored in one location.
Motor	A source of mechanical power.
Motorboat	Any watercraft 65 feet or less in length propelled by machinery, whether or not such machinery is the principal source of propulsion.
Navigation	The art of conducting a ship from port to port.
Nautical Mile	6076.12 feet, or 1852 meters, an international standard; the geographical mile, the length of one minute of latitude at the equator, is 6087.20 feet.
Nun Buoy	A conical, red buoy bearing an even number and marking the starboard side of a channel from seaward.
Oar	A long, wooden instrument with a flat blade at one end, used for propelling a boat.
Outboard	(1) a propulsion unit for boats, attached at the transom; includes motor, driveshaft, and propeller; fuel tank and battery may be integral or installed separately in the boat; (2) outside or away from a vessel's hull; opposite of inboard.
Outdrive	A propulsion system for boats, with an inboard motor operating an exterior drive, with driveshaft, gears, and propeller; also called stern-drive and inboard/outboard.
Overall Length	The extreme length of a vessel, excluding spars or rigging fittings. See LOA.
Painter	A rope attached to the bow of a boat for making it fast.
PFD	Personal Flotation Device.
Pier	A structure, usually wood or masonry, extending into the water, used as a landing place for boats and ships.
Pile	A vertical wooden or concrete pole, driven into the bottom; may be a support for a pier or floats; also used for mooring.
Piling	A structure of piles.
Pitch	(1) The up and down movement as the bow and stern rise and fall due to wave action; (2) The theoretical distance advanced by a propeller in one revolution.
Planing Hull	Type of hull that is shaped to lift out of the water at high speed and ride on the surface.
Port	The left side of a boat when you are facing the bow, also a destination or harbor.
Privileged Vessel	Former term for the vessel with the right-of-way.
Propeller	Wheel or screw. Mechanism that pushes water aft to propel the boat.
Rigging	The general term for all lines (ropes) of a vessel.

Roll	The sideward motion of a boat caused by wind or waves.
Rules of the Road	The nautical traffic rules for preventing collisions on the water.
Scope	The length of the anchor rope or chain. 6 to 1 scope means that the length of the anchor rope from the boat to the anchor is 6 times the depth of the water.
Scupper	A hole allowing water to run off the deck.
Sea Anchor	A floating canvas cone, held open by wire rings, with an opening in the smaller end, and a rope bridle at the larger end attached to a line leading to the vessel; used in storm conditions to (a) keep the bow of the boat to the wind, and (b) slow downwind drift of the boat.
Seacock	A through-hull valve, a shut-off on a plumbing or drain pipe between the vessel's interior and the sea.
Slip	(1) a berth for a boat between two piers or floats; (2) The percentage difference between the theoretical and the actual distance that a propeller advances when turning in water under load.
Sole	The cabin or cockpit floor.
Spar Buoy	A channel marker that looks like a tall, slender pole.
Stand-On Vessel	The vessel with the right-of-way.
Starboard	The right side of a boat when you are facing the bow.
Stern	The after end or back of the boat.
Stow	To store items neatly and securely.
Strake	Planks running fore and aft on the outside of a vessel.
Taffrail	The rail around a boat's stern.
Tide	The alternate rise and fall of waters caused by the gravitational attraction of moon or sun.
Topsides	(1) The sides of a vessel above the waterline; (2) On deck as opposed to below deck.
Transom	The transverse planking which forms the afterend of a small, square-ended boat. (Outboard motors are usually attached to a transom.)
Trim	To arrange weights in a vessel in such a manner as to obtain desired draft at bow and stern.
Trimaran	Boat with three hulls, the center one is the largest.
Unbend	To cast-off or untie.
Underway	Vessel in motion, i.e., when not moored, at anchor or aground.
USPS	United States Power Squadron, a private membership organization that specializes in boating education and good boating practices.

Vessel	Every kind of watercraft, other than a seaplane on the water, capable of being used as a means of transportation on water.
VHF Radio	A Very High Frequency electronic communications and direction finding system.
Wake	Moving waves, created by vessel motion. Track or path that a boat leaves behind it, when moving across the water.
Wash	The loose or broken water left behind a vessel as it moves along; the surging action of waves.
Waterline	The intersection of a vessel's hull and the water's surface; the line separating the bottom paint and the topsides.
Way	Movement of a vessel through the water. Technically it is underway when not at anchor, aground, or made fast to the shore. The common usage is interpreted as progress through the water. Headway when going forward and Sternway when it is going backwards.
Well	Area at the rear of a boat where the motor may be located.
Wharf	A structure, parallel to the shore, for docking vessels.
Wheel	(1) The steering wheel; (2) the propeller.
Whistle Signal	A standard communication signal between boats, to indicate change of course, danger, or other situations.
Windward	Situated on the side closest to the wind. (Opposite of leeward.)
Yaw	To swing or steer off course, as when running with a quartering sea.

WARRANTY

ROBALO BOATS LLC LIMITED WARRANTY

2013 and Subsequent Model Years
P. O. Box 928
Nashville, GA 31639

Upon delivery, owner shall complete the Limited Warranty Registration Card and return it to Robalo LLC, P. O. Drawer 928, Nashville, Georgia 31639 ("Robalo") within fifteen (15) days of delivery of a new Robalo boat from an authorized Robalo dealer.

DEFINITIONS OF TERMS CONTAINED IN THE LIMITED WARRANTY

Hull: The single molded fiberglass shell that rests in the water below the hull flange and its structural components consisting of the stringers and the transom
Structurally Defective: The presence of a defect in material or workmanship that causes the hull to be unsafe or unfit for use under normal operating conditions.
Original Purchaser: Consumer(s) who purchase a new Robalo boat, retail, from an authorized Robalo dealer.
Subsequent Purchaser: Purchaser(s) who acquire a used Robalo boat from the Original Purchaser, or an authorized Robalo dealer, as evidenced by a Bill of Sale and an Ownership Transfer Record completed by the original retail purchaser/ dealer.
Date of Delivery: The date that the new boat was actually delivered to the first retail purchaser.
Demonstrator Boat: An untitled /unregistered boat with 20 or more hours usage.
Fair Market Value: Defined by www.nadaguides.com "Average Retail" as of the date of the Owner's claim.

THE WARRANTIES

ORIGINAL OWNER TEN YEAR LIMITED STRUCTURAL HULL WARRANTY

Subject to the conditions, exclusions and limitations set forth below, Robalo warrants to only the Original Purchaser of a new Robalo boat that either Robalo or its authorized dealer will, at Robalo's option, repair or replace the fiberglass hull manufactured by Robalo if it is found to be Structurally Defective for a period of ten (10) years after the date of delivery. Robalo's obligation to repair or replace a hull is limited to the fair market value of the owner's boat as of the date of the owner's claim.

TRANSFERABLE FIVE-YEAR LIMITED STRUCTURAL HULL WARRANTY

Subject to the conditions, exclusions and limitations set forth below, Robalo warrants to the first subsequent purchaser that Robalo, or its authorized dealer will, at Robalo's option, repair or replace the fiberglass hull manufactured by Robalo if it is found to be Structurally Defective within five (5) years after the date of delivery to the original retail purchaser. Robalo's obligation to repair or replace a hull is limited to the fair market value of the owner's boats as of the date of the owner's claim.

To register the above referenced transfers, the Subsequent Purchaser must mail the following to Robalo Warranty Transfer, P. O. Drawer 928, Nashville, GA 31639 no later than thirty (30) days after the purchase from the Original Purchaser:

(1) An Ownership Transfer Record (included in the Owner's Manual) completed by the Original Purchaser and the Subsequent Purchaser;
(2) A copy of the bill of sale or other evidence of purchase of the boat from the Original Purchaser, including the model and hull identification number; and,
(3) The warranty transfer fee of $500.00 for models less than 26 feet and $1,000 for models 26 feet or greater.

TRANSFERABLE ONE-YEAR LIMITED WARRANTY

Subject to the conditions and limitations to coverage and liability discussed below, Robalo warrants to the original and first subsequent purchaser who has registered the transfer with Robalo in the manner provided above under "TRANSFERABLE FIVE-YEAR LIMITED STRUCTURAL HULL WARRANTY", for a period of one year from the date of delivery to the original purchaser, that each new fiberglass boat manufactured by Robalo is free from defects in material and workmanship.

Please note that engines, outdrives, transom assemblies, controls, batteries, propellers, air conditioners, generators, refrigerators, certain electronics and certain other accessories or components on your boat are not warranted by Robalo under this Limited Warranty, but may be warranted by manufacturers other than Robalo. Please refer to the Robalo Owner's Packet to locate Owner's Manuals for these specific items and instructional information about possible warranties from manufacturers other than Robalo. Except as expressly set out herein, all warranties provided by the manufacturers and distributors of these accessories and components are hereby assigned to the owner, to the extent permitted by the accessory or component manufacturer, as the owner's sole and exclusive remedy with respect to such items. Please note that coverage under any of these other independent warranties is contingent upon your compliance with the warranty registration requirements of the manufacturer of such item.

CONDITIONS TO COVERAGE

In addition to any other conditions to coverage contained herein, the responsibility of Robalo under each of the foregoing limited warranties is also subject to the following conditions:

(1) The owner must first notify the dealer from whom the boat was purchased of any claim under this warranty within the applicable warranty period and within thirty (30) days after the defect is or should have been discovered.
(2) All costs of any nature for delivering any boat to a Robalo dealer, the Robalo factory, or any other point of repair authorized by Robalo and the return thereof shall be paid by the boat owner and are not covered under this warranty. Such cost may include but are not necessarily limited to transportation, freight, haulouts, blocking and storage.
(3) All repairs, corrections or replacements shall be performed by Robalo or a dealer or repair facility authorized by Robalo at its sole discretion.

DEALER RESPONSIBILITIES VS. FACTORY WARRANTY COVERAGE

Robalo Dealers are responsible for keeping inventory in new condition at all times prior to sale of the boat. Any damage that occurs to a boat in a dealer's inventory from weathering, theft, vandalism or failure to adequately protect the boat from environmental conditions will not be covered under any Robalo factory warranty.

STATUTE OF LIMITATIONS

To the extent permitted by applicable State law, any lawsuit with respect to any breach of warranty claim seeking revocation of acceptance or rescission, whether express or implied, must be filed within one (1) year after the cause of action has occurred regardless of the time remaining in the warranty period under the Limited Warranty.

LIMITATION OF COVERAGE FOR AGED INVENTORY

Robalo reserves the right to modify the warranty on any boat based on the amount of time the boat has remained in dealer inventory. Items that are affected by the passage of time may be voided from the warranty. Such items may include, but are not limited to cosmetic issues such as oxidation of gel, fading of plastics, deterioration of vinyl, deterioration of canvas, deterioration of isinglass, drying of rubber seals / caulking, and corrosion of metal parts. Component warranties may be limited based on availability of replacement parts.

Robalo applies the following policy so that customer's may fully understand the nature of their warranty prior to purchasing the boat:

Invoice Date (to dealer)	**Warranty Status**
< 2 years	Full Written Warranty Applies
2 to 3 years	Warranty based on inspection of boat condition. Warranty for cockpit upholstery, canvas, and gel coat may be limited.
3 to 5 year	Cockpit upholstery, canvas, and gel coat have no warranty. Other components normally covered by the One Year Warranty will be honored based on part availability.
> 5 years	Structural Hull Warranty Only

LIMITATION OF COVERAGE FOR DEMONSTRATION MODELS PURCHASED FROM ROBALO DEALERS

Original retail purchaser(s), who otherwise comply with this Warranty Statement, receive the balance, as they exist at the time of purchase, of the Five-Year Transferable Limited Structural Hull Warranty and the One-Year Transferable Limited Warranty, only. The period of such limited warranties shall commence on the date the boat was first used for in-water demonstration purposes by the Dealer. ALL OTHER WARRANTIES ARE EXCLUDED. Warranty Transfer fees are waived for demonstrator boats.

LIMITATION OF REMEDIES

(1) Robalo's obligation under this warranty is limited to the cost of repair of the warranted item or replacement thereof, at Robalo's sole option, when returned prepaid to Robalo or other point of repair authorized by Robalo.
(2) Robalo is not liable for loss of use, loss of time, inconvenience, economic loss, commercial loss or any consequential, incidental, general and/or special damages.

EXCLUSIONS

THE LIMITED WARRANTIES SET FORTH ABOVE DO NOT COVER:

1) Any boat that has been subject to any type of repossession.
2) Any boat not purchased by an original retail purchaser, or a subsequent purchaser, as defined herein,
3) Any failure or defect resulting from normal wear and tear, climatic conditions, use under other than normal conditions or the lack of proper maintenance;
4) Any boat which has been powered or loaded in excess of the manufacturer's maximum horsepower and/or capacity recommendations;
5) Any boat used or once used for racing, boat clubs, yacht clubs, law enforcement, military, rental, charter or commercial purposes;
6) Any boat that has been subject to misuse, negligence, an accident, or structural modifications;
7) Plexiglas windscreen breakage, windshield breakage, windshield leakage,
8) Fuel gauges and fuel gauge systems, or fuel tanks;
9) Defects in paint or gel coat finishes including blisters below the waterline, cracking, crazing, or minor discoloration;
10) Defects in upholstery, canvas, vinyl, and other materials;
11) Damage, rot, mildew or other damage to upholstery, canvas, vinyl, plywood, carpet and other materials and components within the interior as a result of water damage including, without limitation, condensation or precipitation;
12) Installation of engines, or other parts or accessories installed by anyone other than Robalo;
13) Any boat that has been used after the discovery of a defect is or should have been discovered and such continued use causes additional or other damage to the boat; and
14) Except as described in the Limitations to Coverage above, any boat that has been used by the dealer for demonstration purposes.
15) Any defect or repair requiring redesign of the Boat, except pursuant to the recall provision of the United States Federal Boat Safety Act of 1971 or the recall laws of any other foreign jurisdiction.
16) Any Robalo boat acquired by a retail sales outlet from any sources other than the Robalo factory.

17) Damage, shrinkage, wear and tear, or deterioration of upholstery, carpet, graphics, and exterior canvas tops, enclosures, and weather covers (including rainwater leakage)
18) Rainwater leakage including rainwater leakage through canvas tops and enclosures.
19) Engines, controls, gauges, hard-top frames, T-top frames, batteries, propellers, air conditioners, generators, refrigerators, electronics and other accessories, components or other equipment which have been manufactured or purchased from other manufacturers, whether subject to a separate warranty or not, by such other manufacturers;
20) Estimates that relate to speed, fuel consumption, weight or statements made by any person other than Robalo Boats.
21) Any boat owned by anyone other than the original retail purchaser unless an Ownership Transfer Record has been properly filed with Robalo.
22) Electrolysis, galvanic corrosion, crevice corrosion or any other deterioration of underwater components.

TRANSFERABILITY OF COMPONENT MANUFACTURE'S WARRANTIES

Engines, controls, batteries, propellers, air conditioners, generators, refrigerators, certain electronics and certain other accessories or components on your boat may be warranted by manufacturers other than Robalo. Please refer to the Robalo Owner's Packet to locate Owner's Manuals for these specific items and instructional information about possible warranties from manufacturers other than Robalo. Except as expressly set out herein, all warranties provided by the manufacturers and distributors of these accessories and components are hereby assigned to the owner, to the extent permitted by the accessory or component manufacturer, as the owner's sole and exclusive remedy with respect to such items. Please note that coverage under any of these other independent warranties is contingent upon your compliance with the warranty registration requirements of the manufacturer of such item.

SOME STATES DO NOT ALLOW THE EXCLUSION OR LIMITATION OF INCIDENTAL OR CONSEQUENTIAL DAMAGES, SO THE FOREGOING LIMITATIONS OR EXCLUSIONS MAY NOT APPLY TO YOU.

OTHER THAN THOSE LIMITED WARRANTIES CONTAINED HEREIN, ROBALO MAKES NO OTHER WARRANTIES. ANY WARRANTY OF MERCHANTABILITY OR FITNESS FOR A PARTICULAR PURPOSE WITH RESPECT TO ANY COMPONENT OF THE BOAT IS LIMITED TO THE DURATION OF THE LIMITED WARRANTY APPLICABLE TO SUCH COMPONENT, AS SET FORTH ABOVE.

SOME STATES DO NOT ALLOW LIMITATIONS ON HOW LONG ANY IMPLIED WARRANTY LASTS, SO THE FOREGOING LIMITATION MAY NOT APPLY TO YOU.

OWNER'S OBLIGATION:

Warranty repairs, unless otherwise authorized by Robalo, should be performed by the selling Robalo dealer. In the event a boat is out of the Owner's possession for more than 15 days for warranty repair, the Owner must notify Robalo. The Owner must also notify Robalo for any claimed defect that is not corrected after one repair attempt. Robalo requires written notice from the Owner of any warranty claim prior to the expiration of the limited warranty. The Owner must allow Robalo an opportunity to repair or replace parts pursuant to the terms of this Limited Warranty.

BY ACCEPTING DELIVERY OF THE BOAT COVERED BY THIS LIMITED WARRANTY, THE BOAT OWNER UNDERSTANDS AND AGREES AS FOLLOWS:

(1) No dealer or any other person is authorized to make on Robalo's behalf any other warranty other than those expressly set forth herein.
(2) Robalo reserves the right, without notice, to make changes to or discontinue models and Robalo shall be under no obligation to equip or modify boats built prior to such changes.
(3) Robalo will discharge its obligations under this warranty as rapidly as possible, but cannot guarantee any specified completion date due to the different nature of claims that may be made and services that may be required.
(4) Robalo is the registered trademark of Robalo Boats LLC.
(5) Owner has inspected the boat, or if not was given an opportunity to do so, and is satisfied with the boat and its component parts.

PLEASE READ THIS STATEMENT OF WARRANTY CAREFULLY. IF YOU HAVE ANY QUESTIONS REGARDING YOUR RIGHTS AND OBLIGATIONS UNDER THIS WARRANTY, PLEASE CONTACT YOUR ROBALO DEALER OR ROBALO'S CUSTOMER SERVICE DEPARTMENT AT (229) 686-7481.

PRE-SALE AVAILABILITY OF WRITTEN WARRANTIES

The "Magnuson-Moss Warranty Federal Trade Commission Improvement Act" requires that products with a value of more than $15.00 must have a "written warranty policy" available for customer inspection prior to the sale. Upon request, Robalo Boats, LLC will make available additional copies of the enclosed warranty statements printed on 8 ½ x 11 stock paper. Dealers have the option of displaying the warranty statement next to the product or in a warranty binder.

WARRANTY TRANSFER POLICY

The "Robalo Boats LLC Limited Warranty" may be transferred to subsequent owner(s) providing the Ownership Transfer Record (OTR) is properly completed and returned to the Robalo Customer Service Office. The Ownership Transfer fee is $500.00 for boats with hull lengths less than 26 feet and $1,000.00 for boats with hull lengths of 26 feet or more. Length is determined by published LOA. The Ownership Transfer Record can be found in the Warranty section of the Owner's Manual.

The subsequent owner(s) will receive the balance of the available Warranty subject to a $100.00 deductible per occurrence for claims filed in accordance with the Robalo Limited Warranty Policy. If you have questions concerning the status of ownership of a vessel please contact the Robalo Customer Service Office for assistance.

A copy of the Ownership Transfer Record is in this Owner's Manual.

DEMONSTRATOR REGISTRATION POLICY

The courts have held that a demonstrator is not a new boat. Robalo defines a demo boat as a boat with more than 20 hours on the (one of the) engines. A boat used for demonstration purposes cannot be sold as a new boat. The court clearly explains that, when anything is sold as new, the product must not have been used previously for any purpose, including demonstrations. This ruling applies to outboards, sterndrives, snowmobiles, cars, accessories and parts. Dealers selling products should be aware of this legal pitfall and the possible consequences.

Warranty Registration Cards must be filled out immediately for demonstration boats in the same manner that they are for sold boats. This includes personal use by dealers or dealership staff. Products used as demonstrators will be registered to the dealer in the same manner as products sold to customers. The warranty period on any model used as a demonstrator will commence on the date that the unit was placed in such service.

Original Retail Purchasers of Demo boats are NOT required to pay a Warranty Transfer Fee, but are required to complete an Ownership Transfer Form within 30 days of purchasing the boat. They will receive the balance of the Five-Year Transferable Limited Structural Hull Warranty and the balance of the One-Year Transferable Limited Warranty only. Robalo defines the start date of these warranties as the date the boat was originally place into Demo service.

A copy of the Ownership Transfer Record is in this Owner's Manual.

WIRING SCHEMATICS 12

PROPRIETARY RIGHTS
THIS DOCUMENT DRAWING DISCLOSES SUBJECT MATTER IN WHICH BH ELECTRONICS INC HAS PROPRIETARY RIGHTS. THE INFORMATION AND DESIGN DISCLOSED HEREIN WERE ORIGINATED BY AND ARE THE PROPERTY OF BH ELECTRONICS INC. NEITHER RECEIPT NOR POSSESSION THEREOF CONFERS OR TRANSFERS ANY RIGHT TO REPRODUCE, COPY, OR DISCLOSE THE DOCUMENT OR ANY PART THEREOF, ANY INFORMATION CONTAINED THEREIN OR TO CONSTRUCT PANELS OR HARNESSES FROM IT, EXCEPT BY WRITTEN PERMISSION FROM OR WRITTEN AGREEMENT WITH BH ELECTRONICS INC. THIS DOCUMENT IS TO BE RETURNED UPON REQUEST TO BH ELECTRONICS INC.

REVISIONS

REV	DESCRIPTION	DATE	MADE BY	ECN NO.
-	REDLINE MARKUPS FOR PROTO #2. RCV'D 8/7/12	8-21-12	RM	-
-	DEL THE REM CBL. NOT NEEDED ON THIS HNS. PER KF/JBR	8-23-12	RM	-
-	DELETED MEM WIRING. PER KEVIN F.	9-26-12	RM	-
-	MOVED STERN LT 12" FORWARD. PER K.F.	10-29-12	RM	-

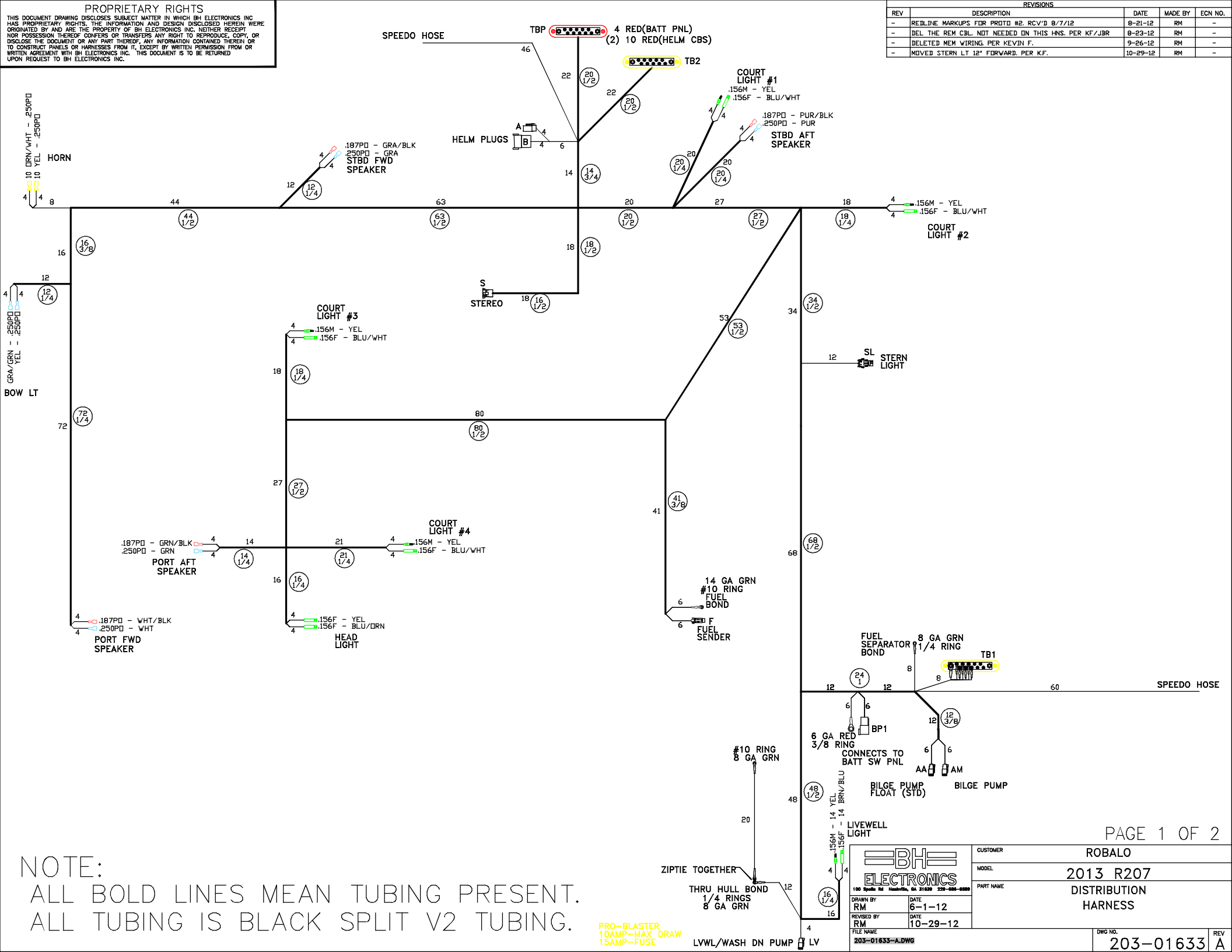

NOTE:
ALL BOLD LINES MEAN TUBING PRESENT.
ALL TUBING IS BLACK SPLIT V2 TUBING.

PAGE 1 OF 2

BH ELECTRONICS
100 Spalls Rd Nashville, GA 31639 229-686-8589

CUSTOMER	ROBALO
MODEL	2013 R207
PART NAME	DISTRIBUTION HARNESS
DRAWN BY	RM
DATE	6-1-12
REVISED BY	RM
DATE	10-29-12
FILE NAME	203-01633-A.DWG
DWG NO.	203-01633
REV	A

-	FACEPLATE WAS 200-01072	10-10-12	JBR	-
-	CORRECTED FUEL TERM. BOAT RELEASED PER JB	1-22-13	RM	-

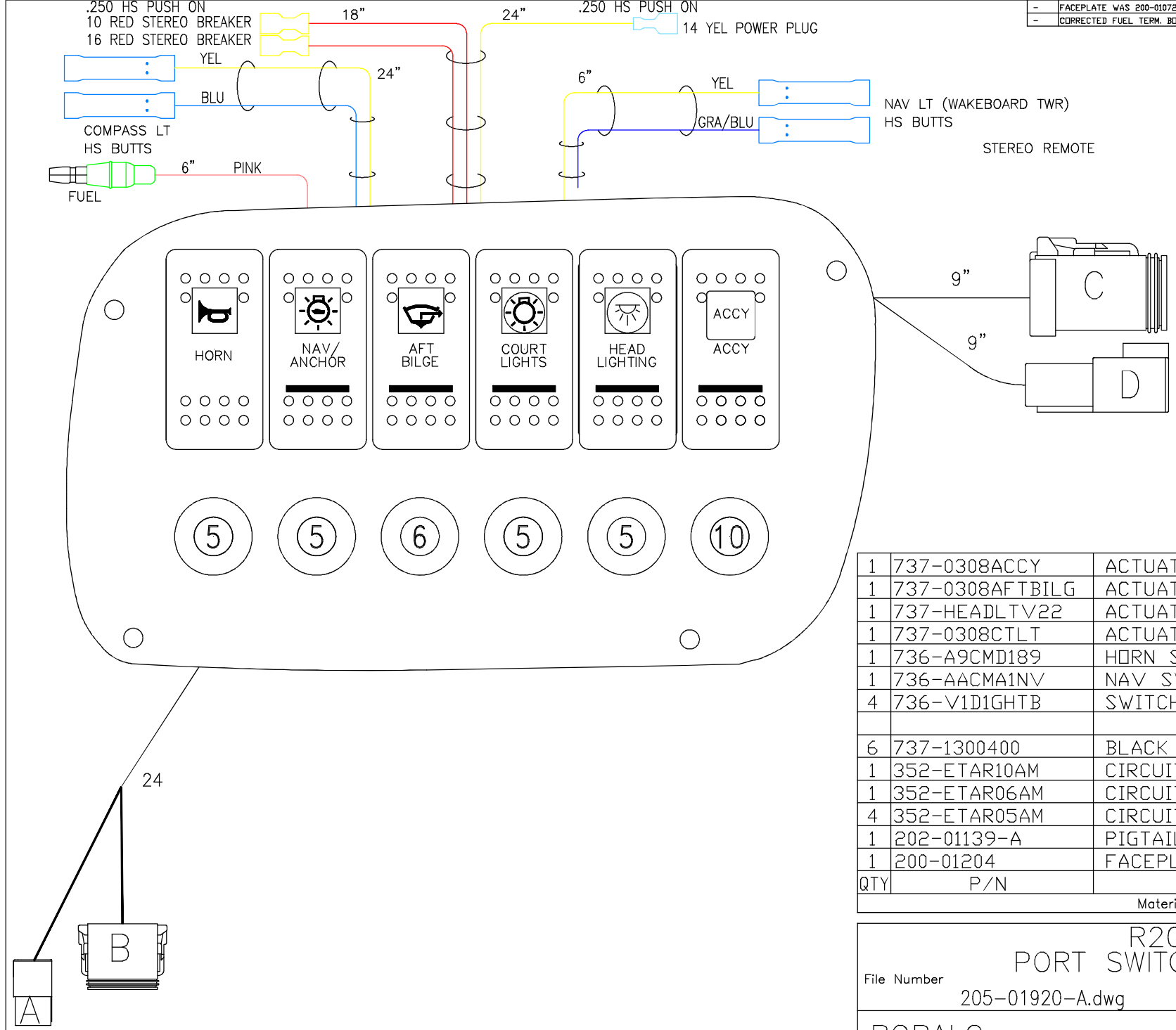

QTY	P/N	DESCRIPTION
1	737-0308ACCY	ACTUATOR - ACCY
1	737-0308AFTBILG	ACTUATOR - A. BILGE
1	737-HEADLTV22	ACTUATOR - HEAD LT
1	737-0308CTLT	ACTUATOR - COURTESY LT
1	736-A9CMD189	HORN SWITCH W/ACTUATOR
1	736-AACMA1NV	NAV SWITCH W/ACTUATOR
4	736-V1D1GHTB	SWITCH BASE SPST
6	737-1300400	BLACK BOOT - 3/8-24 CARLING
1	352-ETAR10AM	CIRCUIT BREAKER CARLING 10A
1	352-ETAR06AM	CIRCUIT BREAKER CARLING 6A
4	352-ETAR05AM	CIRCUIT BREAKER CARLING 5A
1	202-01139-A	PIGTAIL
1	200-01204	FACEPLATE

Material

R207
PORT SWITCH PANEL

File Number
205-01920-A.dwg

ROBALO

Drawn By	Date	REV Date	
RM	6-25-12	1-22-13 RM	BH ELECTRONICS
		Panel Number 205-01920-A	

.090 ALUM - PAINT BLACK

PROPRIETARY RIGHTS

THIS DOCUMENT DRAWING DISCLOSES SUBJECT MATTER IN WHICH BH ELECTRONICS INC HAS PROPRIETARY RIGHTS. THE INFORMATION AND DESIGN DISCLOSED HEREIN WERE ORIGINATED BY AND ARE THE PROPERTY OF BH ELECTRONICS INC. NEITHER RECEIPT NOR POSSESSION THEREOF CONFERS OR TRANSFERS ANY RIGHT TO REPRODUCE, COPY, OR DISCLOSE THE DOCUMENT OR ANY PART THEREOF, ANY INFORMATION CONTAINED THEREIN OR TO CONSTRUCT PANELS OR HARNESSES FROM IT, EXCEPT BY WRITTEN PERMISSION FROM OR WRITTEN AGREEMENT WITH BH ELECTRONICS INC. THIS DOCUMENT IS TO BE RETURNED UPON REQUEST TO BH ELECTRONICS INC.

-	FACEPLATE WAS 200-01073	10-10-12	JBR	-

CUST INSTALLED TAB SWITCH

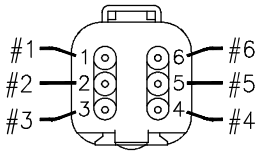

6-Way Deutsch DT Series Receptacle
Receptacle DT04-6P
Secondary Lock W6P

#1 SEAL
#2 14 TAN/BLK (LVWL/WASH PUMP)
#3 14 BRN/BLU (LIVEWELL LTS)
#4 16 BLU (PNL LTS)
#5 16 BLK (PNL LTS)
#6 SEAL

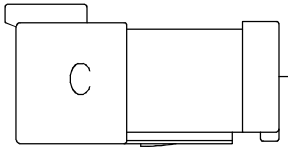

9"

9"

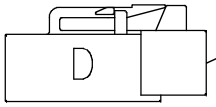

2-Way Deutsch DTP Series Plug
Plug DTP02-2S
Secondary Lock WP2S
#1 10 RED (CB FEED)
#2 SEAL

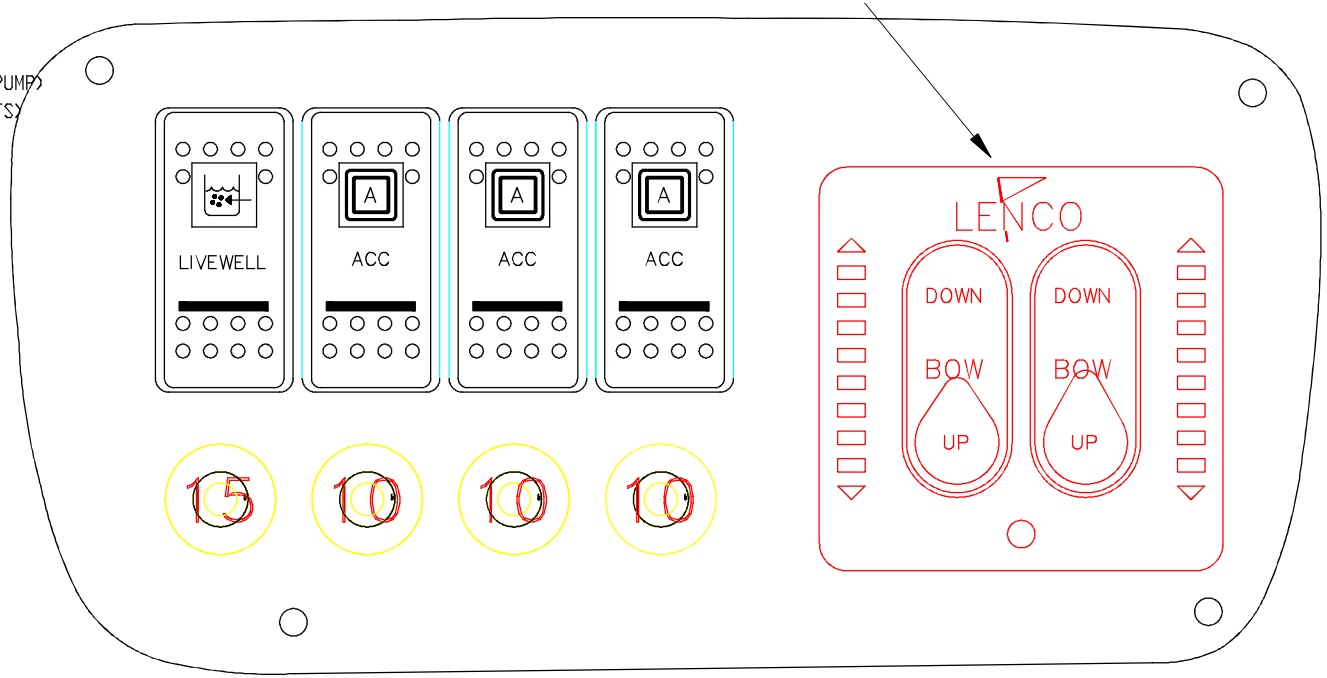

QTY	P/N	DESCRIPTION
1	737-0308LIVE	ACTUATOR - LIVEWELL
3	737-0308ACCY	ACTUATOR - ACC
1	736-VJDJGHTB	SWITCH BASE DPDT (2 LT)
3	736-V1D1GHTB	SWITCH BASE SPST
4	737-1300400	BLACK BOOT - 3/8-27(CARLING)
1	352-ETAR15AM	CIRCUIT BREAKER CARLING 15A
3	352-ETAR010AM	CIRCUIT BREAKER CARLING 10A
1	202-01140-A	PIGTAIL
1	200-01205	FACEPLATE

Material

.090 ALUM - PAINT BLACK POLANE T - MED TEXTURE

R207
STBD SWITCH PANEL W/ TABS

File Number
205-01921-A.dwg

ROBALO

Drawn By	Date	REV Date	
RM	6-25-12	10-10-12 JBR	BH ELECTRONICS
		Panel Number 205-01921-A	

PROPRIETARY RIGHTS
THIS DOCUMENT DRAWING DISCLOSES SUBJECT MATTER IN WHICH BH ELECTRONICS INC HAS PROPRIETARY RIGHTS. THE INFORMATION AND DESIGN DISCLOSED HEREIN WERE ORIGINATED BY AND ARE THE PROPERTY OF BH ELECTRONICS INC. NEITHER RECEIPT NOR POSSESSION THEREOF CONFERS OR TRANSFERS ANY RIGHT TO REPRODUCE, COPY, OR DISCLOSE THE DOCUMENT OR ANY PART THEREOF, ANY INFORMATION CONTAINED THEREIN OR TO CONSTRUCT PANELS OR HARNESSES FROM IT, EXCEPT BY WRITTEN PERMISSION FROM OR WRITTEN AGREEMENT WITH BH ELECTRONICS INC. THIS DOCUMENT IS TO BE RETURNED UPON REQUEST TO BH ELECTRONICS INC.

-	FACEPLATE WAS 200-01074	10-10-12	JBR	-

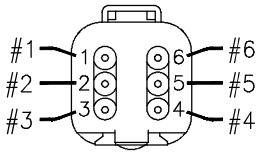

6-Way Deutsch DT Series Receptacle
Receptacle DT04-6P
Secondary Lock W6P

#1 SEAL
#2 14 TAN/BLK (LVWL/WASH PUMP)
#3 14 BRN/BLU (LIVEWELL LTS)
#4 16 BLU (PNL LTS)
#5 16 BLK (PNL LTS)
#6 SEAL

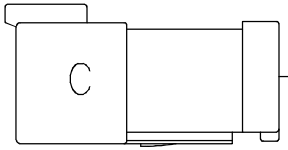

9"

9"

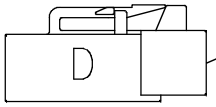

2-Way Deutsch DTP Series Plug
Plug DTP02-2S
Secondary Lock WP2S
#1 10 RED (CB FEED)
#2 SEAL

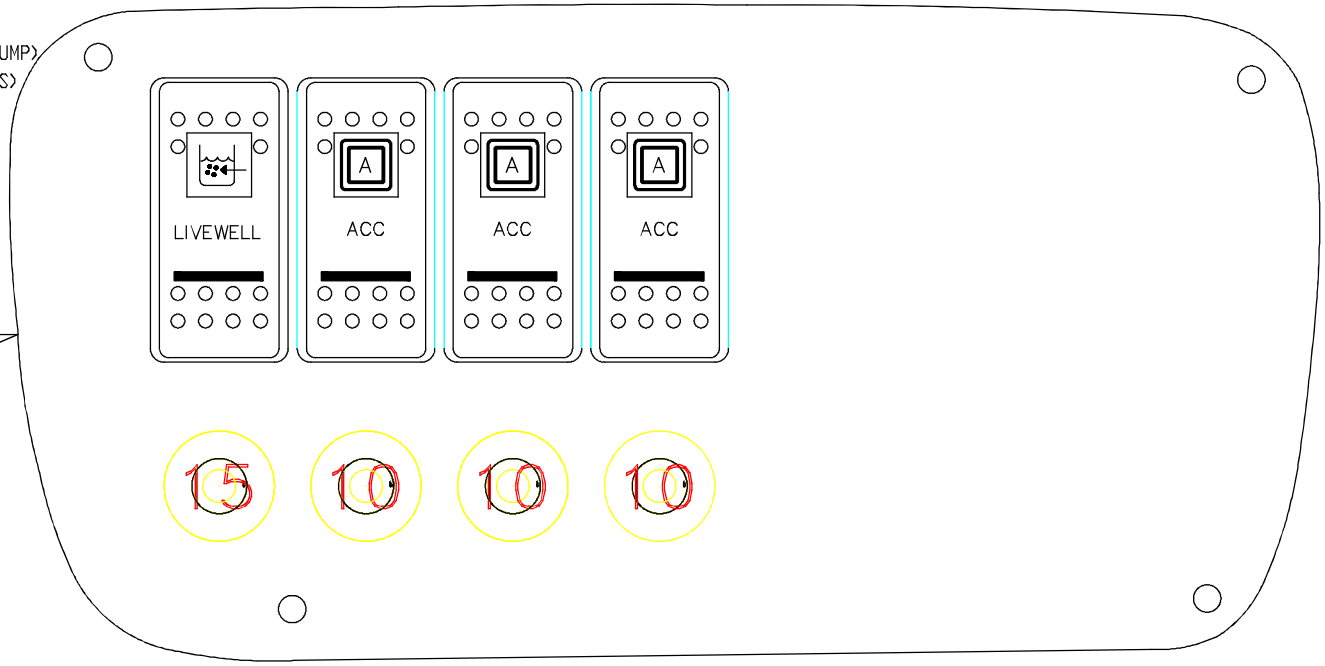

.090 ALUM - PAINT BLACK POLANE T - MED TEXTURE

QTY	P/N	DESCRIPTION
1	737-0308LIVE	ACTUATOR - LIVEWELL
3	737-0308ACCY	ACTUATOR - ACC
1	736-VJDJGHTB	SWITCH BASE DPDT (2 LT)
3	736-V1D1GHTB	SWITCH BASE SPST
4	737-1300400	BLACK BOOT - 3/8-27(CARLING)
1	352-ETAR15AM	CIRCUIT BREAKER CARLING 15A
3	352-ETAR010AM	CIRCUIT BREAKER CARLING 10A
1	202-01140-A	PIGTAIL
1	200-01206	FACEPLATE

Material

R207
STBD SWITCH PANEL W/O TABS

File Number
205-01922-A.dwg

ROBALO

Drawn By	Date	REV Date	
RM	6-25-12	10-10-12 JBR	BH ELECTRONICS
		Panel Number 205-01922-A	

PROPRIETARY RIGHTS
THIS DOCUMENT DRAWING DISCLOSES SUBJECT MATTER IN WHICH BH ELECTRONICS INC HAS PROPRIETARY RIGHTS. THE INFORMATION AND DESIGN DISCLOSED HEREIN WERE ORIGINATED BY AND ARE THE PROPERTY OF BH ELECTRONICS INC. NEITHER RECEIPT NOR POSSESSION THEREOF CONFERS OR TRANSFERS ANY RIGHT TO REPRODUCE, COPY, OR DISCLOSE THE DOCUMENT OR ANY PART THEREOF, ANY INFORMATION CONTAINED THEREIN OR TO CONSTRUCT PANELS OR HARNESSES FROM IT, EXCEPT BY WRITTEN PERMISSION FROM OR WRITTEN AGREEMENT WITH BH ELECTRONICS INC. THIS DOCUMENT IS TO BE RETURNED UPON REQUEST TO BH ELECTRONICS INC.

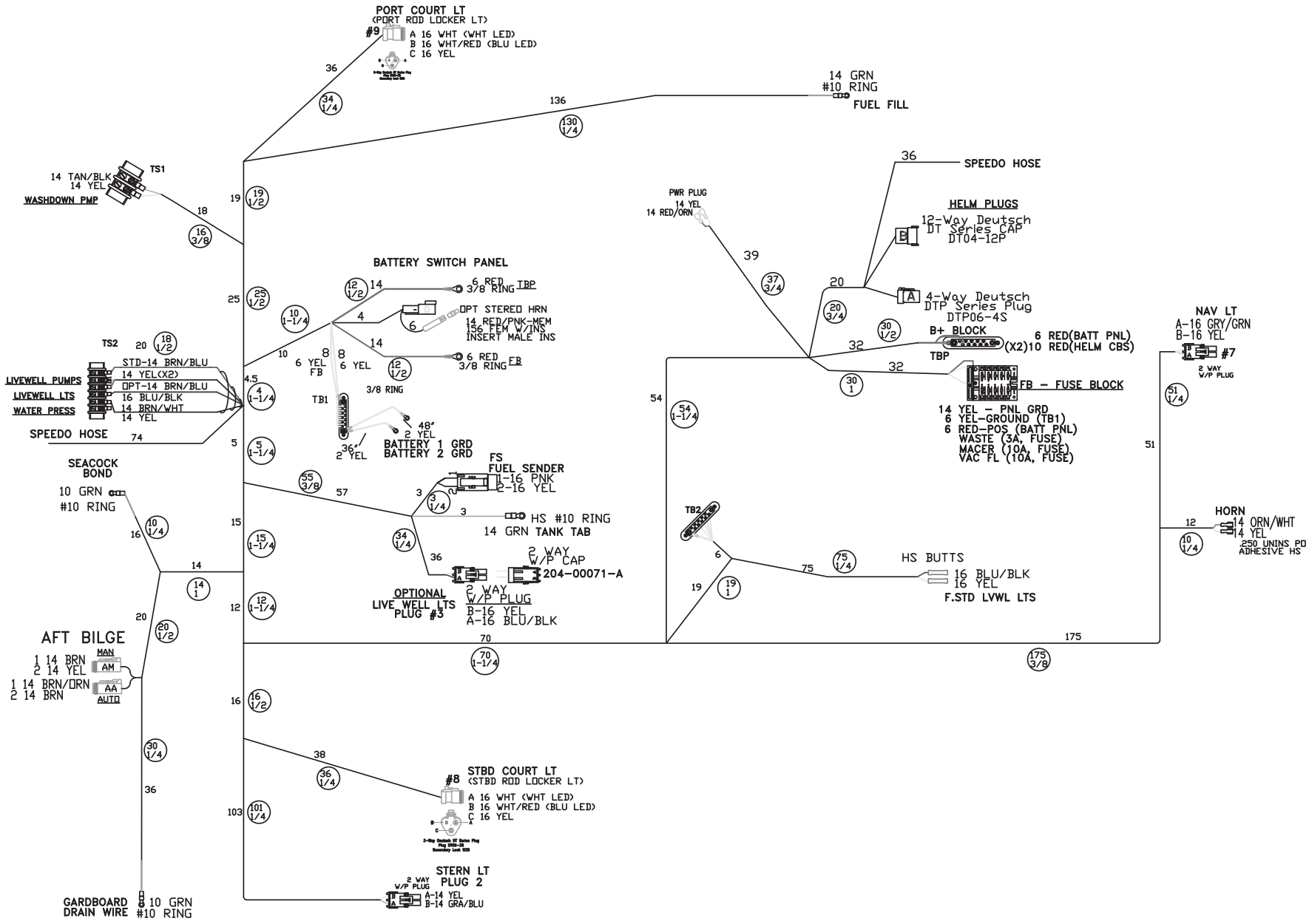
PORT COURT LT
(PORT ROD LOCKER LT)
#9
A 16 WHT (WHT LED)
B 16 WHT/RED (BLU LED)
C 16 YEL
14 GRN
#10 RING
FUEL FILL
SPEEDO HOSE
TS1
14 TAN/BLK
14 YEL
WASHDOWN PMP
PWR PLUG
14 YEL
14 RED/ORN
HELM PLUGS
12-Way Deutsch
DT Series CAP
DT04-12P
4-Way Deutsch
DTP Series Plug
DTP06-4S
BATTERY SWITCH PANEL
6 RED
3/8 RING
TBP
OPT STEREO HRN
14 RED/PNK-MEM
156 FEM W/INS
INSERT MALE INS
6 RED
3/8 RING
FB
6 YEL
FB
6 YEL
3/8 RING
TB1
48"
2 YEL
36"
2 YEL
BATTERY 1 GRD
BATTERY 2 GRD
B+ BLOCK
6 RED(BATT PNL)
(X2)10 RED(HELM CBS)
TBP
FB – FUSE BLOCK
14 YEL – PNL GRD
6 YEL–GROUND (TB1)
6 RED–POS (BATT PNL)
WASTE (3A, FUSE)
MACER (10A, FUSE)
VAC FL (10A, FUSE)
NAV LT
A-16 GRY/GRN
B-16 YEL
#7
2 WAY
W/P PLUG
TS2
STD-14 BRN/BLU
14 YEL(X2)
OPT-14 BRN/BLU
16 BLU/BLK
14 BRN/WHT
14 YEL
LIVEWELL PUMPS
LIVEWELL LTS
WATER PRESS
SPEEDO HOSE
SEACOCK
BOND
10 GRN
#10 RING
FS
FUEL SENDER
1-16 PNK
2-16 YEL
HS #10 RING
14 GRN TANK TAB
2 WAY
W/P CAP
204-00071-A
OPTIONAL
LIVE WELL LTS
PLUG #3
2 WAY
W/P PLUG
B-16 YEL
A-16 BLU/BLK
TB2
HS BUTTS
16 BLU/BLK
16 YEL
F.STD LVWL LTS
HORN
14 ORN/WHT
14 YEL
.250 UNINS PD
ADHESIVE HS
AFT BILGE
1 14 BRN
2 14 YEL
MAN
AM
1 14 BRN/ORN
2 14 BRN
AA
AUTO
STBD COURT LT
(STBD ROD LOCKER LT)
#8
A 16 WHT (WHT LED)
B 16 WHT/RED (BLU LED)
C 16 YEL
STERN LT
PLUG 2
2 WAY
W/P PLUG
A-14 YEL
B-14 GRA/BLU
GARDBOARD
DRAIN WIRE
10 GRN
#10 RING

Robalo 220

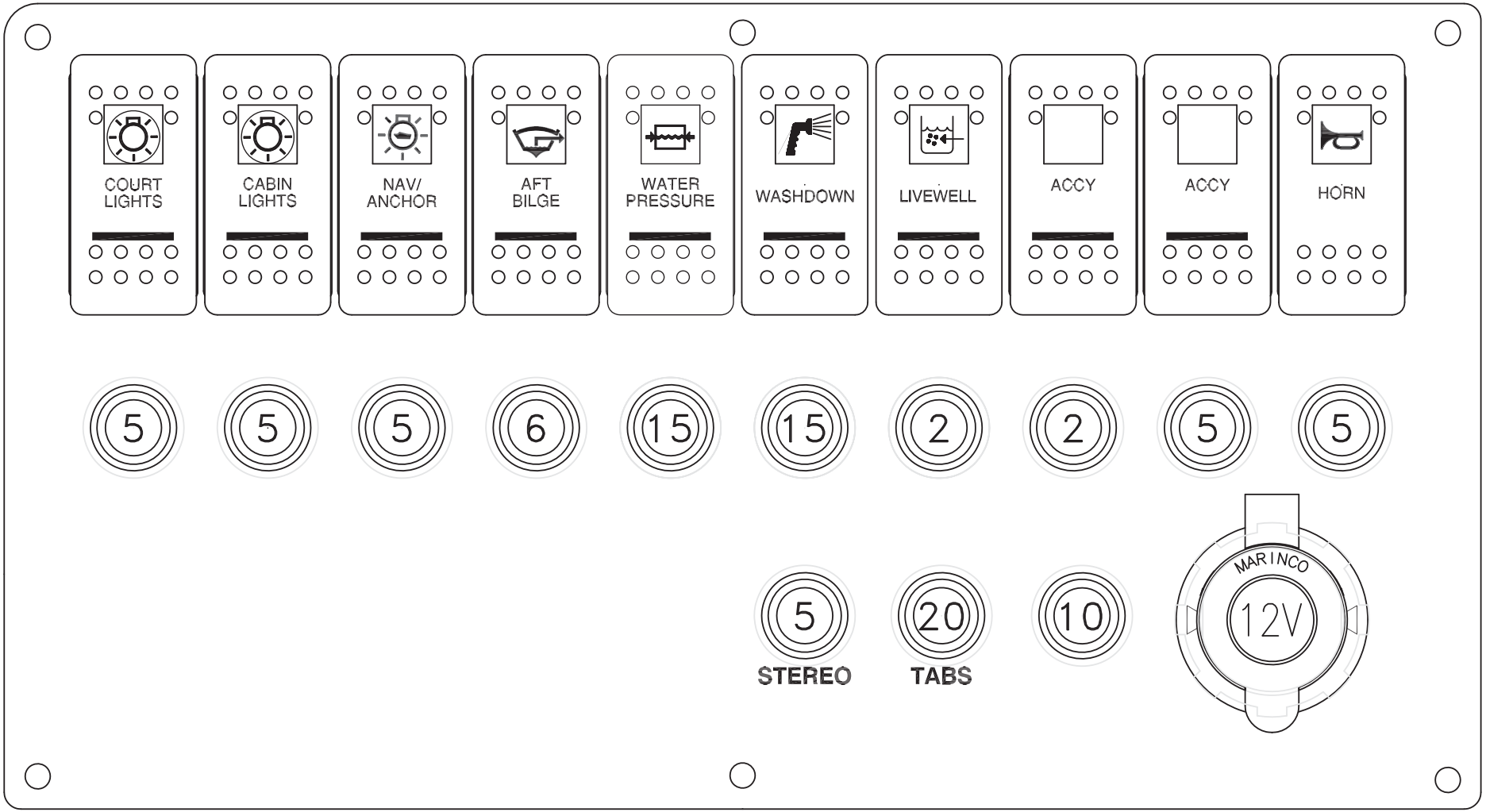
COURT LIGHTS
CABIN LIGHTS
NAV/ ANCHOR
AFT BILGE
WATER PRESSURE
WASHDOWN
LIVEWELL
ACCY
ACCY
HORN
5
5
5
6
15
15
2
2
5
5
5
STEREO
20
TABS
10
MARINCO
12V

Robalo 220

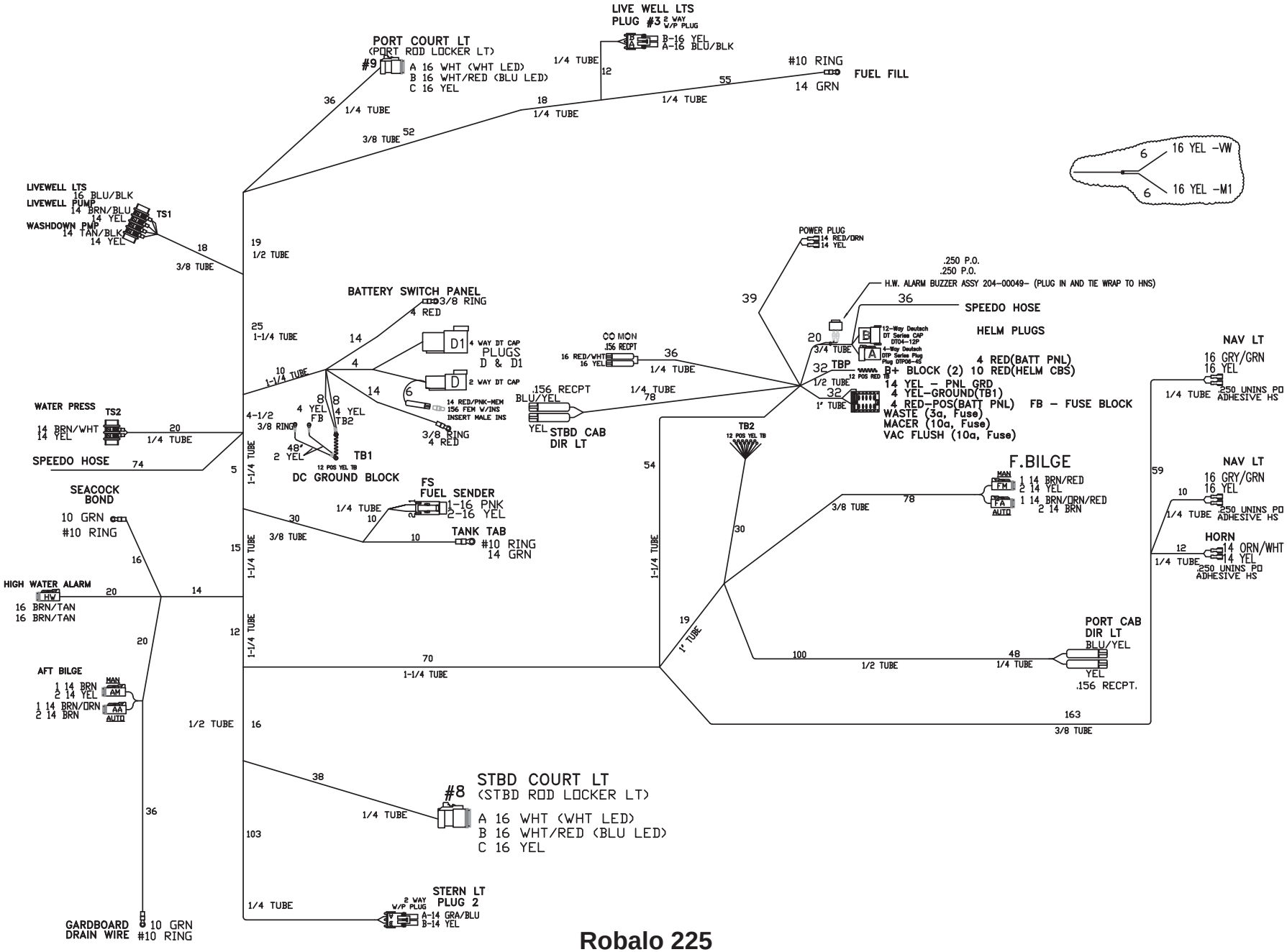
LIVE WELL LTS
PLUG #3 2 WAY W/P PLUG
B-16 YEL
A-16 BLU/BLK
PORT COURT LT
(PORT ROD LOCKER LT)
#9
A 16 WHT (WHT LED)
B 16 WHT/RED (BLU LED)
C 16 YEL
#10 RING
14 GRN
FUEL FILL
1/4 TUBE
3/8 TUBE
16 YEL -VW
16 YEL -M1
LIVEWELL LTS
16 BLU/BLK
LIVEWELL PUMP
14 BRN/BLU
14 YEL
WASHDOWN PMP
14 TAN/BLK
14 YEL
TS1
1/2 TUBE
1-1/4 TUBE
BATTERY SWITCH PANEL
3/8 RING
4 RED
D1
4 WAY DT CAP
PLUGS
D & D1
D
2 WAY DT CAP
14 RED/PNK-MEM
.156 FEM W/INS
INSERT MALE INS
3/8 RING
4 RED
CO MON
.156 RECPT
16 RED/WHT
16 YEL
.156 RECPT
BLU/YEL
YEL
STBD CAB
DIR LT
POWER PLUG
14 RED/ORN
14 YEL
.250 P.O.
.250 P.O.
H.W. ALARM BUZZER ASSY 204-00049- (PLUG IN AND TIE WRAP TO HNS)
SPEEDO HOSE
HELM PLUGS
12-Way Deutsch DT Series CAP DT04-12P
4-Way Deutsch DTP Series Plug DTP06-4S
TBP
12 POS RED TB
4 RED(BATT PNL)
B+ BLOCK (2) 10 RED(HELM CBS)
14 YEL - PNL GRD
4 YEL-GROUND(TB1)
4 RED-POS(BATT PNL)
FB - FUSE BLOCK
WASTE (3a, Fuse)
MACER (10a, Fuse)
VAC FLUSH (10a, Fuse)
NAV LT
16 GRY/GRN
16 YEL
250 UNINS PO
ADHESIVE HS
WATER PRESS
TS2
14 BRN/WHT
14 YEL
SPEEDO HOSE
4-1/2
3/8 RING
4 YEL
FB
8
4 YEL
TB2
49"
2 YEL
TB1
12 POS YEL TB
DC GROUND BLOCK
TB2
12 POS YEL TB
F.BILGE
MAN
FM
1 14 BRN/RED
2 14 YEL
FA
AUTO
1 14 BRN/ORN/RED
2 14 BRN
SEACOCK
BOND
10 GRN
#10 RING
FS
FUEL SENDER
1-16 PNK
2-16 YEL
TANK TAB
#10 RING
14 GRN
HORN
14 ORN/WHT
14 YEL
HIGH WATER ALARM
HV
16 BRN/TAN
16 BRN/TAN
PORT CAB
DIR LT
BLU/YEL
YEL
.156 RECPT.
AFT BILGE
1 14 BRN
2 14 YEL
AM
1 14 BRN/ORN
2 14 BRN
AA
AUTO
1" TUBE
STBD COURT LT
(STBD ROD LOCKER LT)
#8
A 16 WHT (WHT LED)
B 16 WHT/RED (BLU LED)
C 16 YEL
STERN LT
PLUG 2
2 WAY W/P PLUG
A-14 GRA/BLU
B-14 YEL
GARDBOARD
DRAIN WIRE
10 GRN
#10 RING

Robalo 225

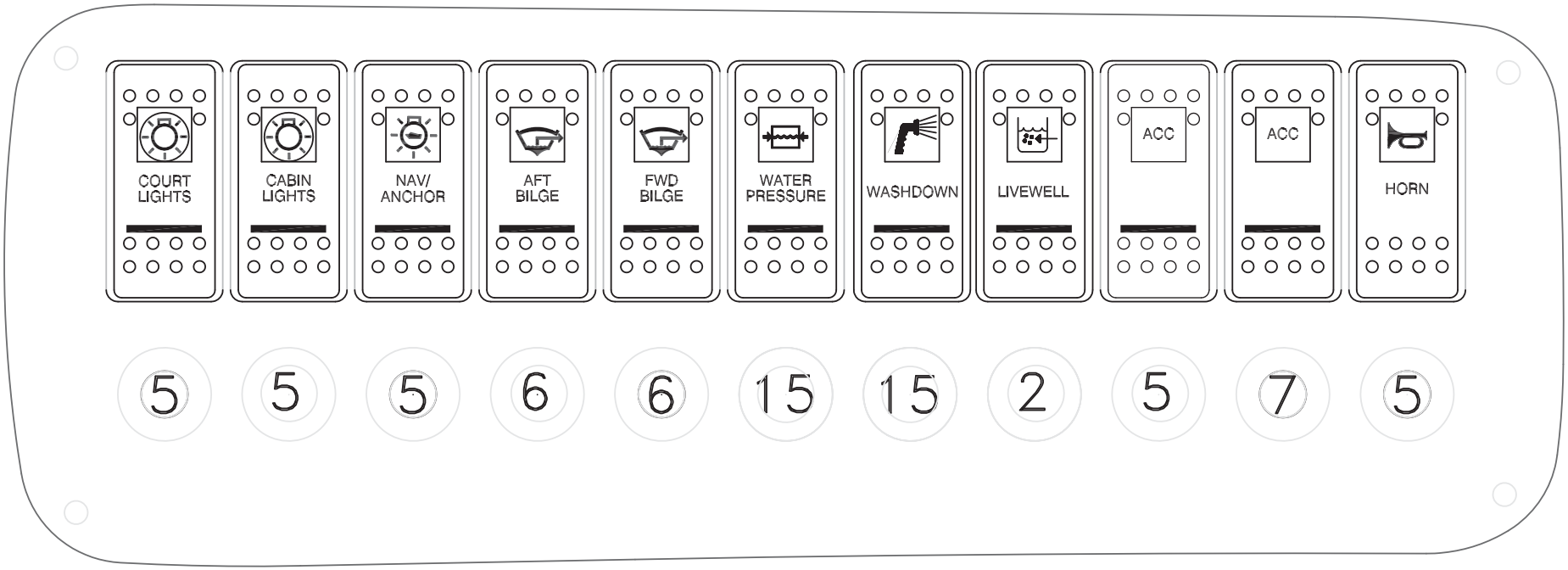
COURT LIGHTS
CABIN LIGHTS
NAV/ ANCHOR
AFT BILGE
FWD BILGE
WATER PRESSURE
WASHDOWN
LIVEWELL
ACC
ACC
HORN
5
5
5
6
6
15
15
2
5
7
5

Robalo 225

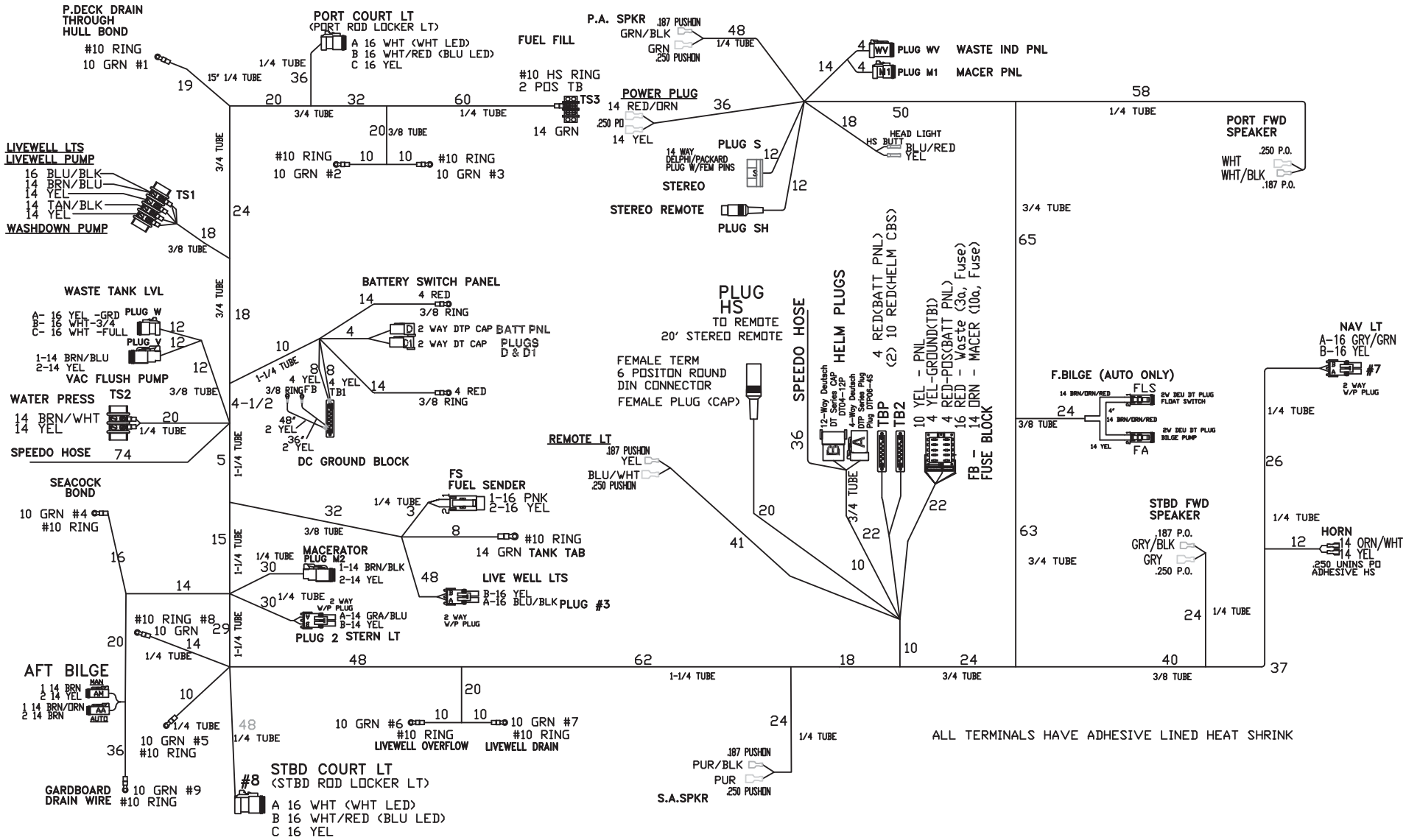
P.DECK DRAIN THROUGH HULL BOND
#10 RING
10 GRN #1
PORT COURT LT
(PORT ROD LOCKER LT)
A 16 WHT (WHT LED)
B 16 WHT/RED (BLU LED)
C 16 YEL
FUEL FILL
#10 HS RING
2 POS TB
TS3
14 GRN
P.A. SPKR
.187 PUSHON
GRN/BLK
GRN
.250 PUSHON
POWER PLUG
14 RED/ORN
.250 PO
14 YEL
PLUG WV
WASTE IND PNL
PLUG M1
MACER PNL
HEAD LIGHT
HS BUTT
BLU/RED
YEL
PORT FWD SPEAKER
.250 P.O.
WHT
WHT/BLK
.187 P.O.
LIVEWELL LTS
LIVEWELL PUMP
16 BLU/BLK
14 BRN/BLU
14 YEL
14 TAN/BLK
14 YEL
TS1
WASHDOWN PUMP
#10 RING
10 GRN #2
#10 RING
10 GRN #3
14 WAY DELPHI/PACKARD PLUG W/FEM PINS
PLUG S
STEREO
STEREO REMOTE
PLUG SH
WASTE TANK LVL
A- 16 YEL -GRD
B- 16 WHT-3/4
C- 16 WHT -FULL
PLUG W
PLUG V
1-14 BRN/BLU
2-14 YEL
VAC FLUSH PUMP
WATER PRESS
TS2
14 BRN/WHT
14 YEL
SPEEDO HOSE
BATTERY SWITCH PANEL
4 RED
3/8 RING
2 WAY DTP CAP
2 WAY DT CAP
BATT PNL PLUGS D & D1
4 YEL
TB1
4 RED
3/8 RING
DC GROUND BLOCK
PLUG HS
TO REMOTE
20' STEREO REMOTE
FEMALE TERM
6 POSITON ROUND
DIN CONNECTOR
FEMALE PLUG (CAP)
SPEEDO HOSE
HELM PLUGS
12-Way Deutsch DT Series CAP DT04-12P
4-Way Deutsch Plug Series Plug DT06-4S
TBP
TB2
4 RED(BATT PNL)
(2) 10 RED(HELM CBS)
10 YEL - PNL
4 YEL -GROUND(TB1)
4 RED-POS(BATT PNL)
16 RED - Waste (3a, Fuse)
14 ORN - MACER (10a, Fuse)
FB - FUSE BLOCK
REMOTE LT
.187 PUSHON
YEL
BLU/WHT
.250 PUSHON
F.BILGE (AUTO ONLY)
FLS
2V DEU DT PLUG FLOAT SVITCH
FA
2V DEU DT PLUG BILGE PUMP
NAV LT
A-16 GRY/GRN
B-16 YEL
#7
2 WAY W/P PLUG
SEACOCK BOND
10 GRN #4
#10 RING
FS
FUEL SENDER
1-16 PNK
2-16 YEL
#10 RING
14 GRN TANK TAB
MACERATOR
PLUG M2
1-14 BRN/BLK
2-14 YEL
LIVE WELL LTS
B-16 YEL
A-16 BLU/BLK
PLUG #3
2 WAY W/P PLUG
A-14 GRA/BLU
B-14 YEL
PLUG 2 STERN LT
STBD FWD SPEAKER
.187 P.O.
GRY/BLK
GRY
.250 P.O.
HORN
14 ORN/WHT
14 YEL
.250 UNINS PO
ADHESIVE HS
#10 RING #8
10 GRN
AFT BILGE
1 14 BRN
2 14 YEL
1 14 BRN/ORN
2 14 BRN
MAN
AK
AA
AUTO
10 GRN #5
#10 RING
GARDBOARD DRAIN WIRE
10 GRN #9
#10 RING
10 GRN #6
#10 RING
LIVEWELL OVERFLOW
10 GRN #7
#10 RING
LIVEWELL DRAIN
STBD COURT LT
#8
(STBD ROD LOCKER LT)
A 16 WHT (WHT LED)
B 16 WHT/RED (BLU LED)
C 16 YEL
.187 PUSHON
PUR/BLK
PUR
.250 PUSHON
S.A.SPKR
ALL TERMINALS HAVE ADHESIVE LINED HEAT SHRINK

Robalo 227

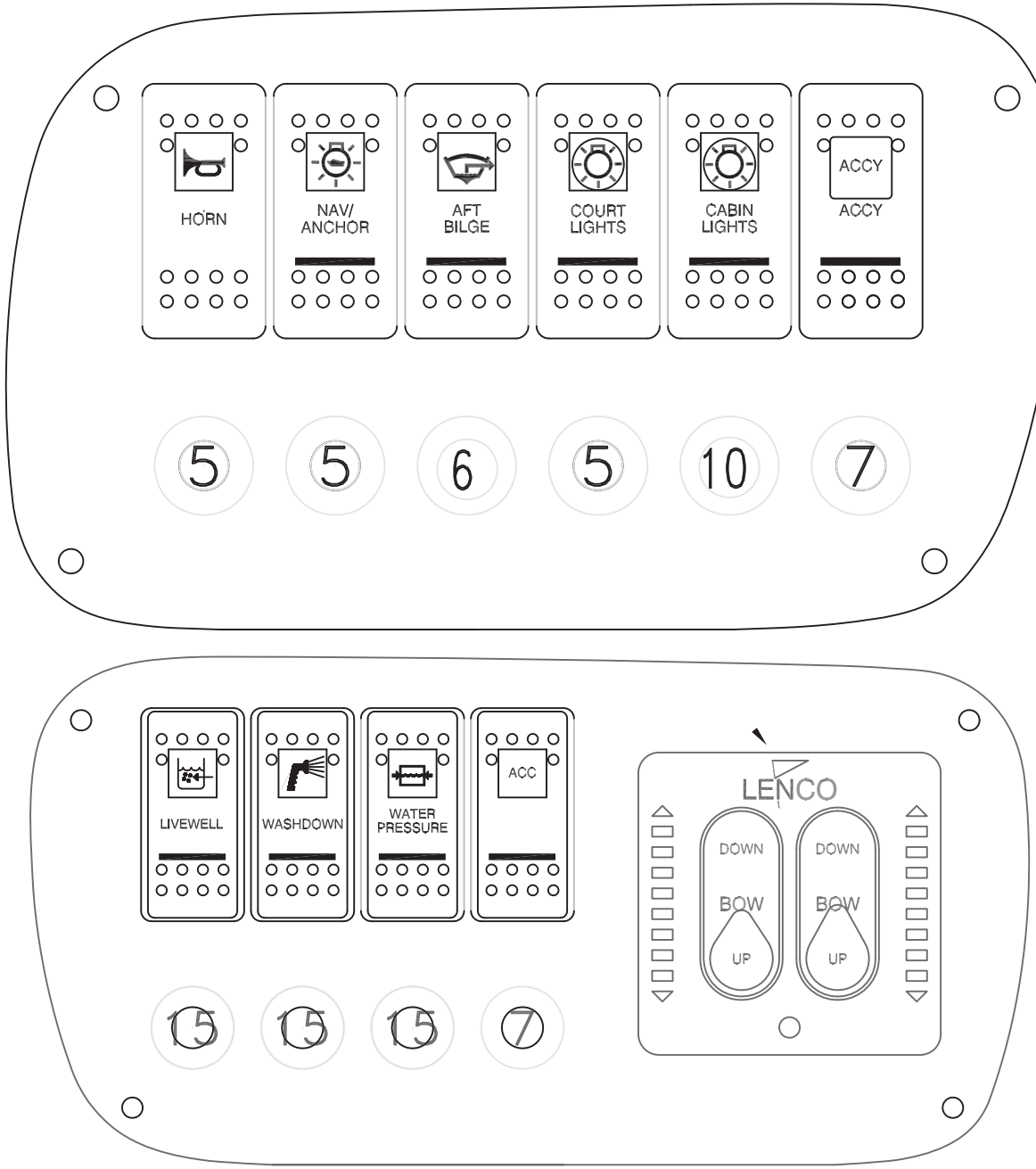
HORN
NAV/ ANCHOR
AFT BILGE
COURT LIGHTS
CABIN LIGHTS
ACCY
ACCY
5
5
6
5
10
7
LIVEWELL
WASHDOWN
WATER PRESSURE
ACC
LENCO
DOWN
BOW
UP
DOWN
BOW
UP
15
15
15
7

Robalo 227

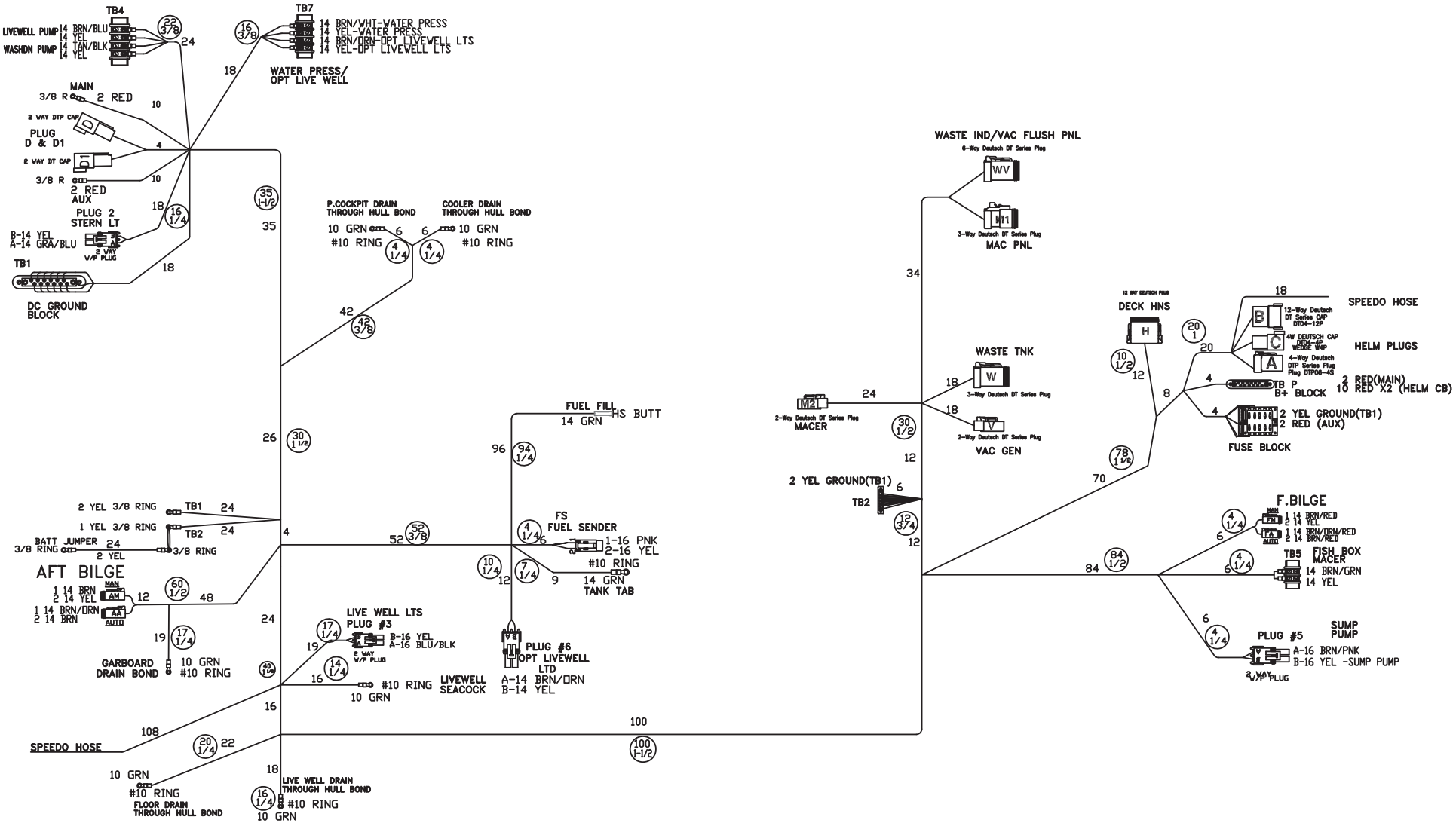
TB4
LIVEWELL PUMP 14 BRN/BLU
14 YEL
WASHDN PUMP 14 TAN/BLK
14 YEL
TB7
14 BRN/WHT-WATER PRESS
14 YEL-WATER PRESS
14 BRN/ORN-OPT LIVEWELL LTS
14 YEL-OPT LIVEWELL LTS
WATER PRESS/
OPT LIVE WELL
MAIN
3/8 R
2 RED
2 WAY DTP CAP
PLUG
D & D1
2 WAY DT CAP
3/8 R
2 RED
AUX
PLUG 2
STERN LT
B-14 YEL
A-14 GRA/BLU
2 WAY
W/P PLUG
TB1
DC GROUND
BLOCK
P.COCKPIT DRAIN
THROUGH HULL BOND
10 GRN
#10 RING
COOLER DRAIN
THROUGH HULL BOND
10 GRN
#10 RING
WASTE IND/VAC FLUSH PNL
6-Way Deutsch DT Series Plug
WV
M1
3-Way Deutsch DT Series Plug
MAC PNL
DECK HNS
H
WASTE TNK
W
3-Way Deutsch DT Series Plug
M2
2-Way Deutsch DT Series Plug
MACER
V
2-Way Deutsch DT Series Plug
VAC GEN
SPEEDO HOSE
12-Way Deutsch
DT Series CAP
DT04-12P
4W DEUTSCH CAP
DT04-4P
WEDGE W4P
4-Way Deutsch
DTP Series Plug
Plug DTP06-4S
HELM PLUGS
B P
B+ BLOCK
2 RED(MAIN)
10 RED X2 (HELM CB)
2 YEL GROUND(TB1)
2 RED (AUX)
FUSE BLOCK
FUEL FILL
HS BUTT
14 GRN
FS
FUEL SENDER
1-16 PNK
2-16 YEL
#10 RING
14 GRN
TANK TAB
2 YEL GROUND(TB1)
TB2
2 YEL 3/8 RING
TB1
1 YEL 3/8 RING
TB2
BATT JUMPER
3/8 RING
3/8 RING
2 YEL
AFT BILGE
1 14 BRN
2 14 YEL
1 14 BRN/ORN
2 14 BRN
MAN
AH
AA
AUTO
GARBOARD
DRAIN BOND
10 GRN
#10 RING
LIVE WELL LTS
PLUG #3
B-16 YEL
A-16 BLU/BLK
2 WAY
W/P PLUG
#10 RING
10 GRN
LIVEWELL
SEACOCK
PLUG #6
OPT LIVEWELL
LTD
A-14 BRN/ORN
B-14 YEL
SPEEDO HOSE
10 GRN
#10 RING
FLOOR DRAIN
THROUGH HULL BOND
LIVE WELL DRAIN
THROUGH HULL BOND
#10 RING
10 GRN
F.BILGE
MAN
FM
1 14 BRN/RED
2 14 YEL
FA
AUTO
1 14 BRN/ORN/RED
2 14 BRN/RED
TB5
FISH BOX
MACER
14 BRN/GRN
14 YEL
SUMP
PUMP
PLUG #5
A-16 BRN/PNK
B-16 YEL -SUMP PUMP
2 WAY
W/P PLUG

Robalo 240

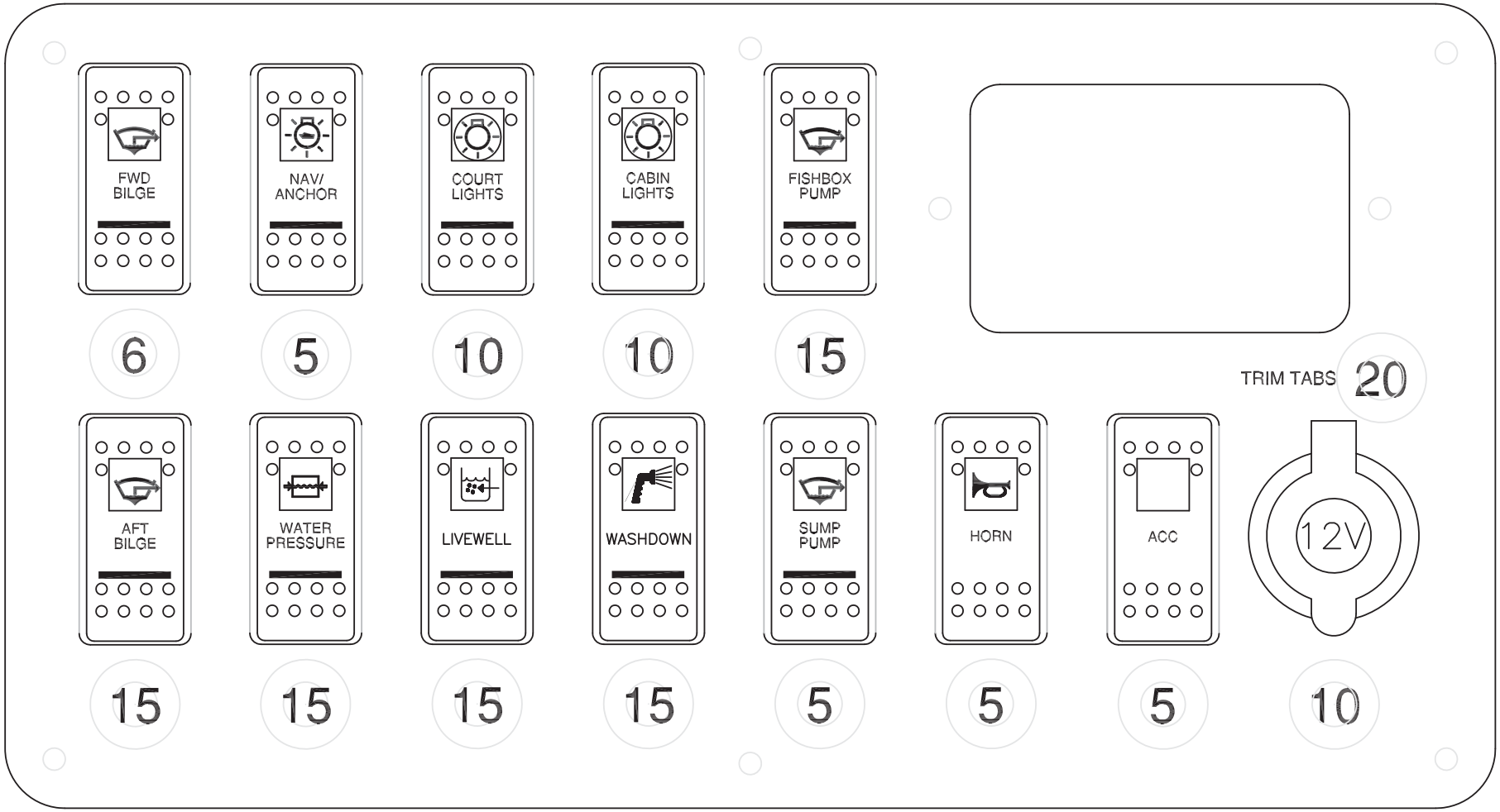
FWD BILGE
NAV/ ANCHOR
COURT LIGHTS
CABIN LIGHTS
FISHBOX PUMP
6
5
10
10
15
TRIM TABS
20
AFT BILGE
WATER PRESSURE
LIVEWELL
WASHDOWN
SUMP PUMP
HORN
ACC
12V
15
15
15
15
5
5
5
10

Robalo 240

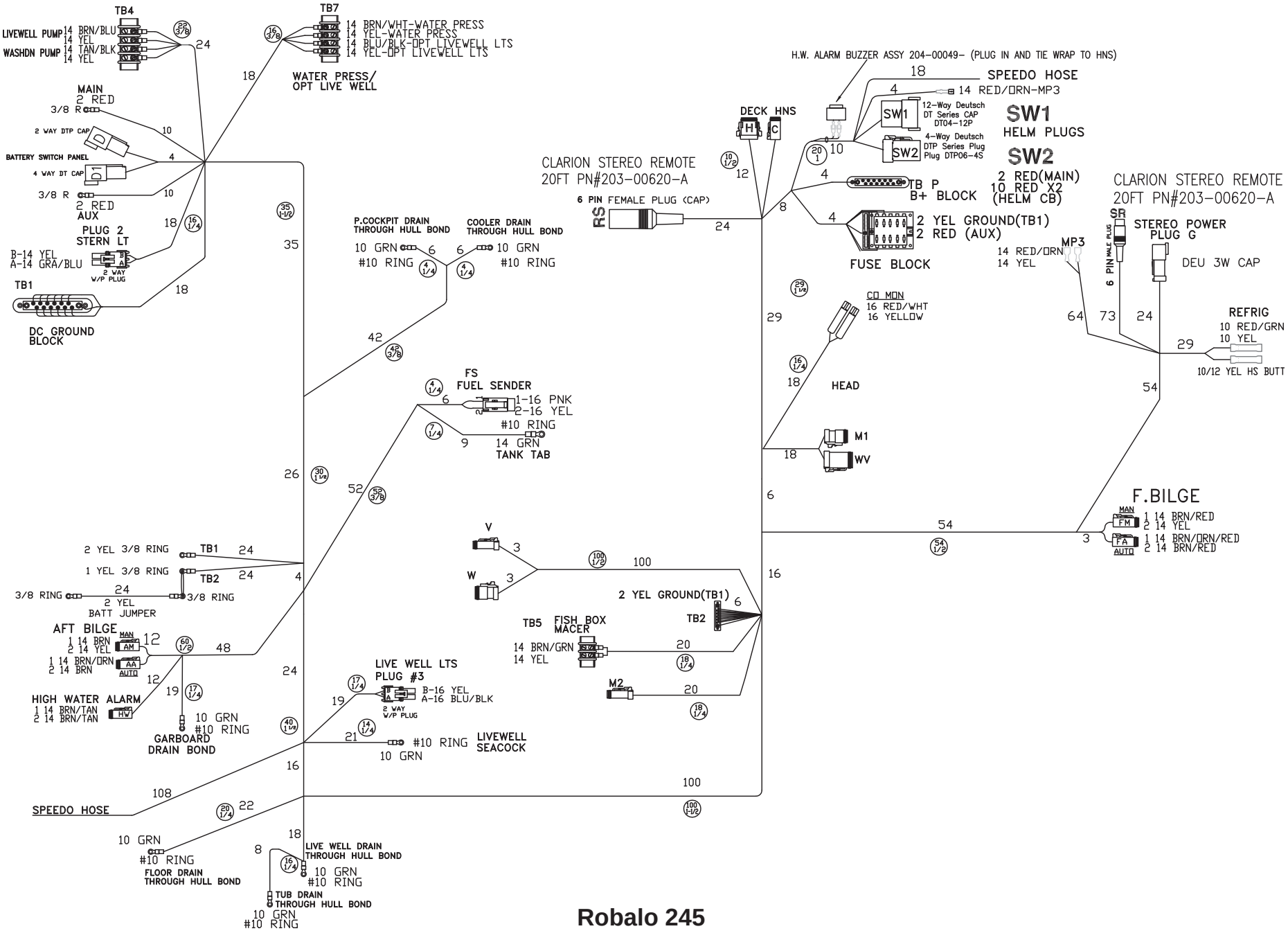
TB4
LIVEWELL PUMP 14 BRN/BLU
14 YEL
WASHDN PUMP 14 TAN/BLK
14 YEL
TB7
14 BRN/WHT-WATER PRESS
14 YEL-WATER PRESS
14 BLU/BLK-OPT LIVEWELL LTS
14 YEL-OPT LIVEWELL LTS
WATER PRESS/
OPT LIVE WELL
MAIN
2 RED
3/8 R
2 WAY DTP CAP
BATTERY SWITCH PANEL
4 WAY DT CAP
3/8 R
2 RED
AUX
PLUG 2
STERN LT
B-14 YEL
A-14 GRA/BLU
2 WAY
W/P PLUG
TB1
DC GROUND
BLOCK
P.COCKPIT DRAIN
THROUGH HULL BOND
10 GRN
#10 RING
COOLER DRAIN
THROUGH HULL BOND
10 GRN
#10 RING
FS
FUEL SENDER
1-16 PNK
2-16 YEL
#10 RING
14 GRN
TANK TAB
2 YEL 3/8 RING
TB1
1 YEL 3/8 RING
TB2
3/8 RING
3/8 RING
2 YEL
BATT JUMPER
AFT BILGE
1 14 BRN
2 14 YEL
1 14 BRN/ORN
2 14 BRN
MAN
AM
AUTO
AA
HIGH WATER ALARM
1 14 BRN/TAN
2 14 BRN/TAN
HW
10 GRN
#10 RING
GARBOARD
DRAIN BOND
LIVE WELL LTS
PLUG #3
B-16 YEL
A-16 BLU/BLK
2 WAY
W/P PLUG
#10 RING
10 GRN
LIVEWELL
SEACOCK
SPEEDO HOSE
10 GRN
#10 RING
FLOOR DRAIN
THROUGH HULL BOND
LIVE WELL DRAIN
THROUGH HULL BOND
10 GRN
#10 RING
TUB DRAIN
THROUGH HULL BOND
10 GRN
#10 RING
V
W
2 YEL GROUND(TB1)
TB2
TB5
FISH BOX
MACER
14 BRN/GRN
14 YEL
M2
H.W. ALARM BUZZER ASSY 204-00049- (PLUG IN AND TIE WRAP TO HNS)
SPEEDO HOSE
14 RED/ORN-MP3
DECK HNS
H
C
SW1
12-Way Deutsch
DT Series CAP
DT04-12P
SW2
4-Way Deutsch
DTP Series Plug
Plug DTP06-4S
SW1
HELM PLUGS
SW2
2 RED(MAIN)
10 RED X2
(HELM CB)
CLARION STEREO REMOTE
20FT PN#203-00620-A
6 PIN FEMALE PLUG (CAP)
RS
TB P
B+ BLOCK
2 YEL GROUND(TB1)
2 RED (AUX)
FUSE BLOCK
CLARION STEREO REMOTE
20FT PN#203-00620-A
SR
STEREO POWER
PLUG G
6 PIN MALE PLUG
DEU 3W CAP
MP3
14 RED/ORN
14 YEL
CO MON
16 RED/WHT
16 YELLOW
HEAD
M1
WV
REFRIG
10 RED/GRN
10 YEL
10/12 YEL HS BUTT
F.BILGE
MAN
FM
1 14 BRN/RED
2 14 YEL
FA
AUTO
1 14 BRN/ORN/RED
2 14 BRN/RED

Robalo 245

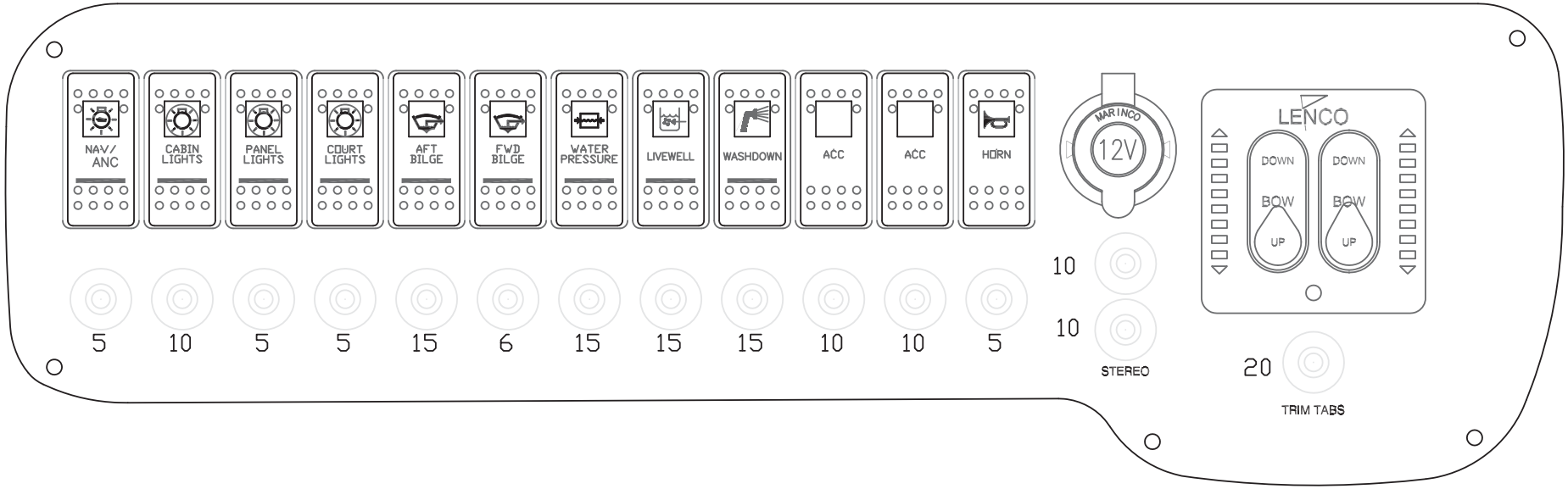
NAV/ ANC
CABIN LIGHTS
PANEL LIGHTS
COURT LIGHTS
AFT BILGE
FWD BILGE
WATER PRESSURE
LIVEWELL
WASHDOWN
ACC
ACC
HORN
5
10
5
5
15
6
15
15
15
10
10
5
MARINCO
12V
10
10
STEREO
LENCO
DOWN
BOW
UP
DOWN
BOW
UP
20
TRIM TABS

Robalo 245

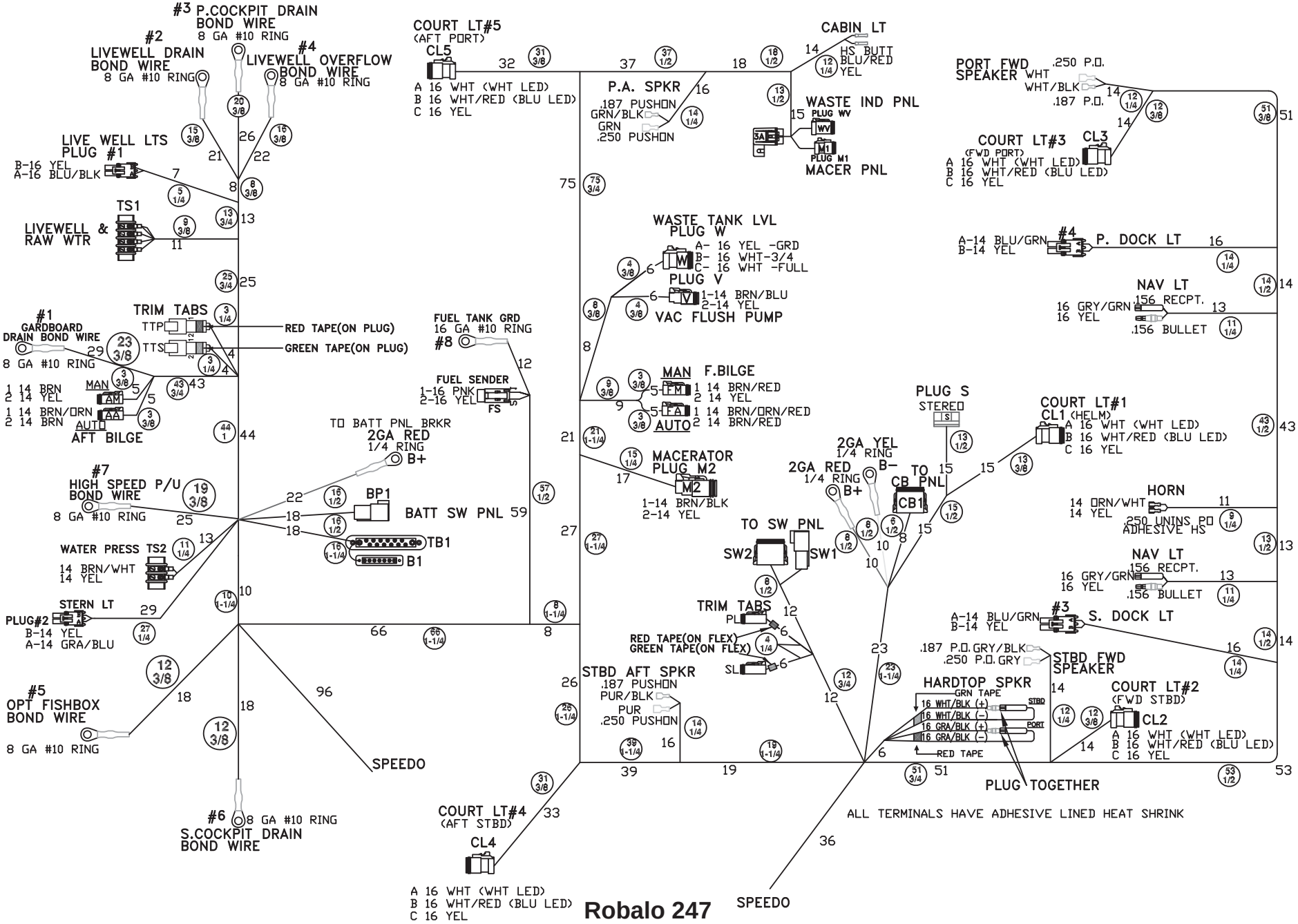
#3 P.COCKPIT DRAIN BOND WIRE
8 GA #10 RING
#2 LIVEWELL DRAIN BOND WIRE
8 GA #10 RING
#4 LIVEWELL OVERFLOW BOND WIRE
8 GA #10 RING
LIVE WELL LTS PLUG #1
B-16 YEL
A-16 BLU/BLK
TS1
LIVEWELL & RAW WTR
#1 GARDBOARD DRAIN BOND WIRE
8 GA #10 RING
TRIM TABS
TTP
TTS
RED TAPE(ON PLUG)
GREEN TAPE(ON PLUG)
1 14 BRN
2 14 YEL
1 14 BRN/ORN
2 14 BRN
MAN
AUTO
AFT BILGE
#7 HIGH SPEED P/U BOND WIRE
8 GA #10 RING
WATER PRESS TS2
14 BRN/WHT
14 YEL
STERN LT
PLUG#2
B-14 YEL
A-14 GRA/BLU
#5 OPT FISHBOX BOND WIRE
8 GA #10 RING
#6 8 GA #10 RING
S.COCKPIT DRAIN BOND WIRE
COURT LT#5 (AFT PORT)
CL5
A 16 WHT (WHT LED)
B 16 WHT/RED (BLU LED)
C 16 YEL
P.A. SPKR
.187 PUSHON
GRN/BLK
GRN
.250 PUSHON
CABIN LT
HS BUTT
BLU/RED
YEL
WASTE IND PNL
PLUG WV
PLUG M1
MACER PNL
PORT FWD SPEAKER
WHT
WHT/BLK
.250 P.O.
.187 P.O.
COURT LT#3 (FWD PORT)
CL3
A 16 WHT (WHT LED)
B 16 WHT/RED (BLU LED)
C 16 YEL
WASTE TANK LVL PLUG W
A- 16 YEL -GRD
B- 16 WHT-3/4
C- 16 WHT -FULL
PLUG V
1-14 BRN/BLU
2-14 YEL
VAC FLUSH PUMP
A-14 BLU/GRN
B-14 YEL
#4 P. DOCK LT
NAV LT
16 GRY/GRN
16 YEL
.156 RECPT.
.156 BULLET
FUEL TANK GRD
16 GA #10 RING
#8
FUEL SENDER
1-16 PNK
2-16 YEL
FS
MAN F.BILGE
1 14 BRN/RED
2 14 YEL
1 14 BRN/ORN/RED
2 14 BRN/RED
AUTO
TO BATT PNL BRKR
2GA RED
1/4 RING
B+
MACERATOR PLUG M2
1-14 BRN/BLK
2-14 YEL
BP1
BATT SW PNL
TB1
B1
PLUG S
STEREO
COURT LT#1 (HELM)
CL1
A 16 WHT (WHT LED)
B 16 WHT/RED (BLU LED)
C 16 YEL
2GA YEL
1/4 RING
B-
2GA RED
1/4 RING
B+
TO CB PNL
CB1
HORN
14 ORN/WHT
14 YEL
.250 UNINS PO ADHESIVE HS
TO SW PNL
SW2
SW1
NAV LT
16 GRY/GRN
16 YEL
.156 RECPT.
.156 BULLET
TRIM TABS
PL
SL
RED TAPE(ON FLEX)
GREEN TAPE(ON FLEX)
A-14 BLU/GRN
B-14 YEL
#3 S. DOCK LT
.187 P.O. GRY/BLK
.250 P.O. GRY
STBD FWD SPEAKER
STBD AFT SPKR
.187 PUSHON
PUR/BLK
PUR
.250 PUSHON
HARDTOP SPKR
GRN TAPE
16 WHT/BLK (+)
16 WHT/BLK (-)
16 GRA/BLK (+)
16 GRA/BLK (-)
STBD
PORT
RED TAPE
COURT LT#2 (FWD STBD)
CL2
A 16 WHT (WHT LED)
B 16 WHT/RED (BLU LED)
C 16 YEL
PLUG TOGETHER
ALL TERMINALS HAVE ADHESIVE LINED HEAT SHRINK
SPEEDO
COURT LT#4 (AFT STBD)
CL4
A 16 WHT (WHT LED)
B 16 WHT/RED (BLU LED)
C 16 YEL
SPEEDO

Robalo 247

THE CIRCUIT BREAKER BUTTON WILL POP
OUT TO INTERRUPT A CIRCUIT FAULT.
WHEN A CIRCUIT BREAKER BUTTON IS POPPED OUT,
CORRECT THE CIRCUIT FAULT PROBLEM,
THEN FIRMLY PRESS THE BUTTON IN ORDER
TO RESET THE TRIPPED CIRCUIT BREAKER

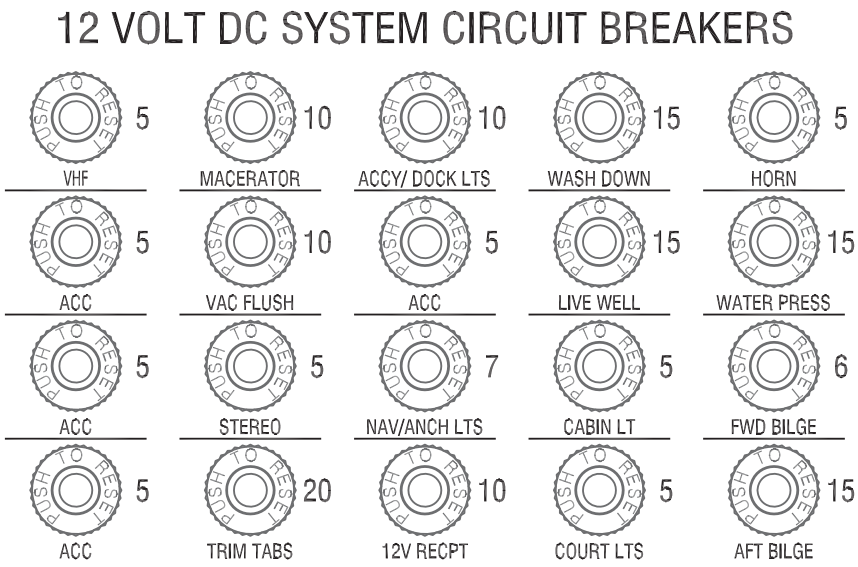

Robalo 247

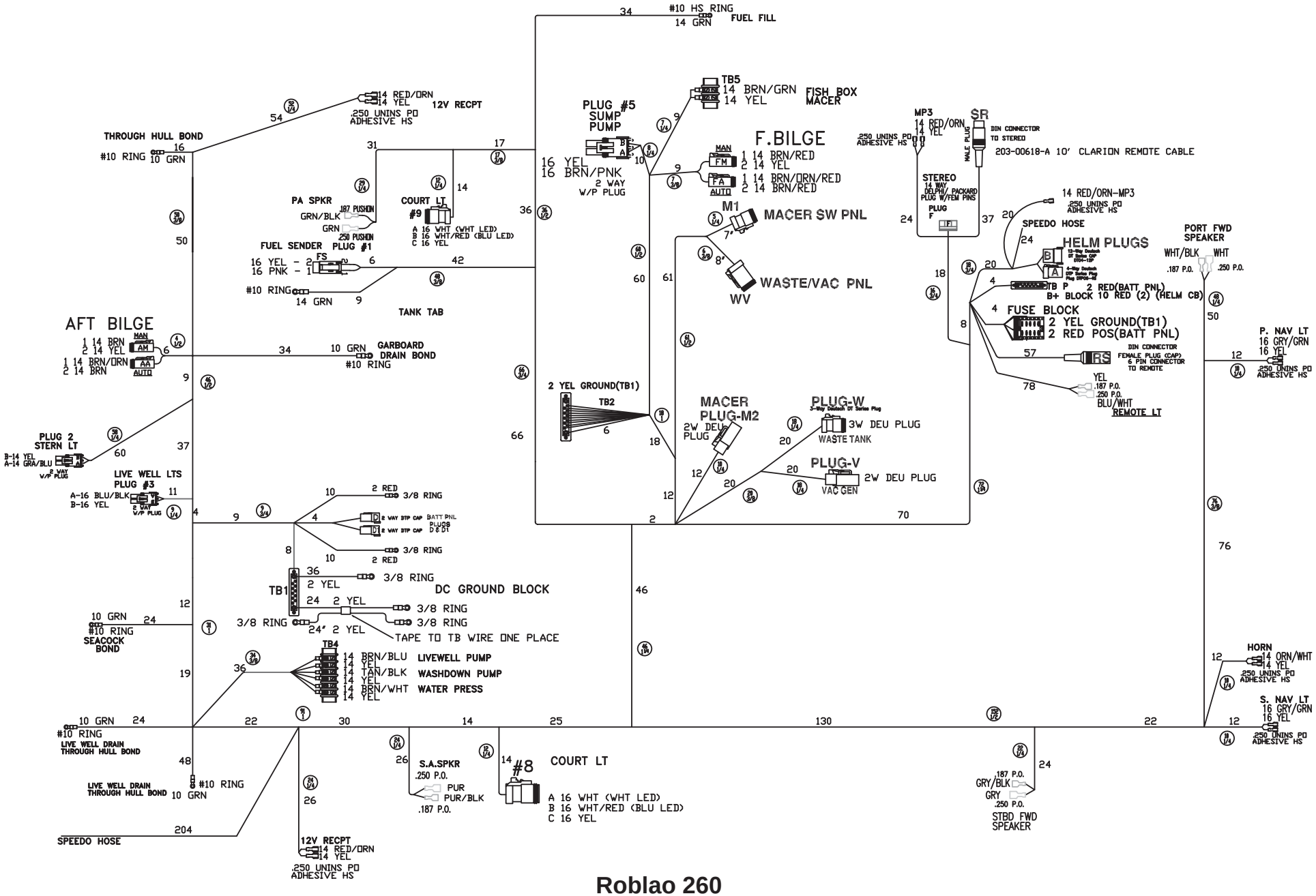
#10 HS RING
14 GRN
FUEL FILL
TB5
14 BRN/GRN
14 YEL
FISH BOX MACER
PLUG #5 SUMP PUMP
16 YEL
16 BRN/PNK
2 WAY W/P PLUG
F.BILGE
1 14 BRN/RED
2 14 YEL
1 14 BRN/ORN/RED
2 14 BRN/RED
MAN
AUTO
M1
MACER SW PNL
WASTE/VAC PNL
WV
14 RED/ORN
14 YEL
12V RECPT
.250 UNINS PO ADHESIVE HS
THROUGH HULL BOND
#10 RING
10 GRN
PA SPKR
.187 PUSHON
GRN/BLK
GRN
.250 PUSHON
COURT LT #9
A 16 WHT (WHT LED)
B 16 WHT/RED (BLU LED)
C 16 YEL
FUEL SENDER PLUG #1
16 YEL - 2
16 PNK - 1
FS
#10 RING
14 GRN
TANK TAB
AFT BILGE
1 14 BRN
2 14 YEL
1 14 BRN/ORN
2 14 BRN
10 GRN
GARBOARD DRAIN BOND
#10 RING
2 YEL GROUND(TB1)
TB2
MACER PLUG-M2
2W DEU PLUG
PLUG-W
3W DEU PLUG
WASTE TANK
PLUG-V
2W DEU PLUG
VAC GEN
PLUG 2 STERN LT
B-14 YEL
A-14 GRA/BLU
2 WAY W/P PLUG
LIVE WELL LTS PLUG #3
A-16 BLU/BLK
B-16 YEL
2 RED
3/8 RING
2 WAY DTP CAP
BATT PNL PLUGS D & D1
TB1
DC GROUND BLOCK
2 YEL
3/8 RING
24" 2 YEL
TAPE TO TB WIRE ONE PLACE
10 GRN
#10 RING
SEACOCK BOND
TB4
14 BRN/BLU
LIVEWELL PUMP
14 YEL
14 TAN/BLK
WASHDOWN PUMP
14 BRN/WHT
WATER PRESS
LIVE WELL DRAIN THROUGH HULL BOND
LIVE WELL DRAIN THROUGH HULL BOND
SPEEDO HOSE
S.A.SPKR
.250 P.O.
PUR
PUR/BLK
.187 P.O.
#8
COURT LT
A 16 WHT (WHT LED)
B 16 WHT/RED (BLU LED)
C 16 YEL
MP3
14 RED/ORN
14 YEL
.250 UNINS PO ADHESIVE HS
SR
MALE PLUG
DIN CONNECTOR TO STEREO
203-00618-A 10' CLARION REMOTE CABLE
STEREO
14 WAY DELPHI/ PACKARD PLUG W/FEM PINS
PLUG F
14 RED/ORN-MP3
.250 UNINS PO ADHESIVE HS
SPEEDO HOSE
HELM PLUGS
TB P 2 RED(BATT PNL)
B+ BLOCK 10 RED (2) (HELM CB)
FUSE BLOCK
2 YEL GROUND(TB1)
2 RED POS(BATT PNL)
RS
DIN CONNECTOR FEMALE PLUG (CAP) 6 PIN CONNECTOR TO REMOTE
YEL
.187 P.O.
.250 P.O.
BLU/WHT
REMOTE LT
PORT FWD SPEAKER
WHT/BLK
WHT
.187 P.O.
.250 P.O.
P. NAV LT
16 GRY/GRN
16 YEL
.250 UNINS PO ADHESIVE HS
HORN
14 ORN/WHT
14 YEL
.250 UNINS PO ADHESIVE HS
S. NAV LT
16 GRY/GRN
16 YEL
.250 UNINS PO ADHESIVE HS
.187 P.O.
GRY/BLK
GRY
.250 P.O.
STBD FWD SPEAKER
12V RECPT
14 RED/ORN
14 YEL
.250 UNINS PO ADHESIVE HS

Roblao 260

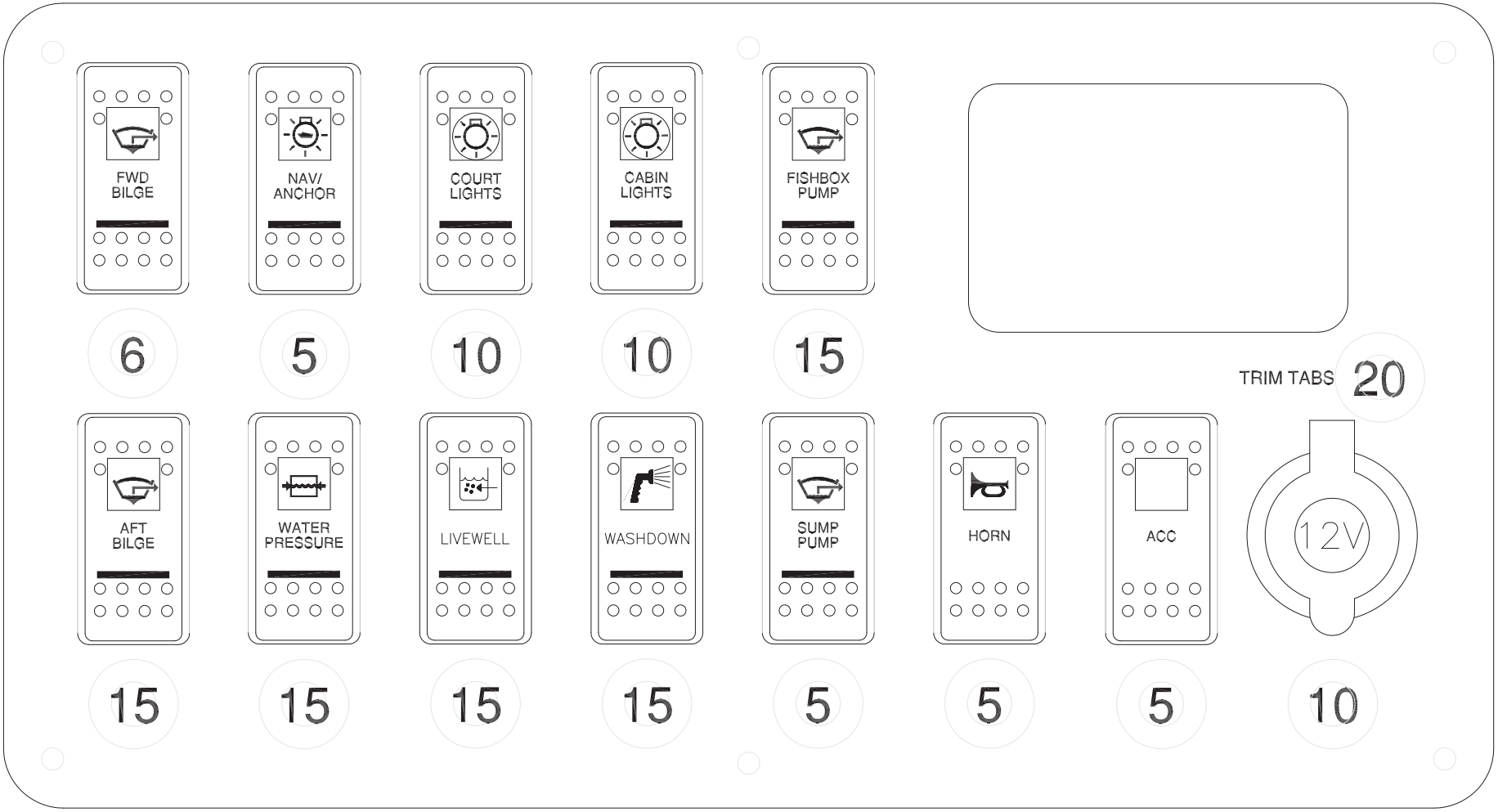
FWD BILGE
NAV/ ANCHOR
COURT LIGHTS
CABIN LIGHTS
FISHBOX PUMP
6
5
10
10
15
TRIM TABS
20
AFT BILGE
WATER PRESSURE
LIVEWELL
WASHDOWN
SUMP PUMP
HORN
ACC
12V
15
15
15
15
5
5
5
10

Robalo 260

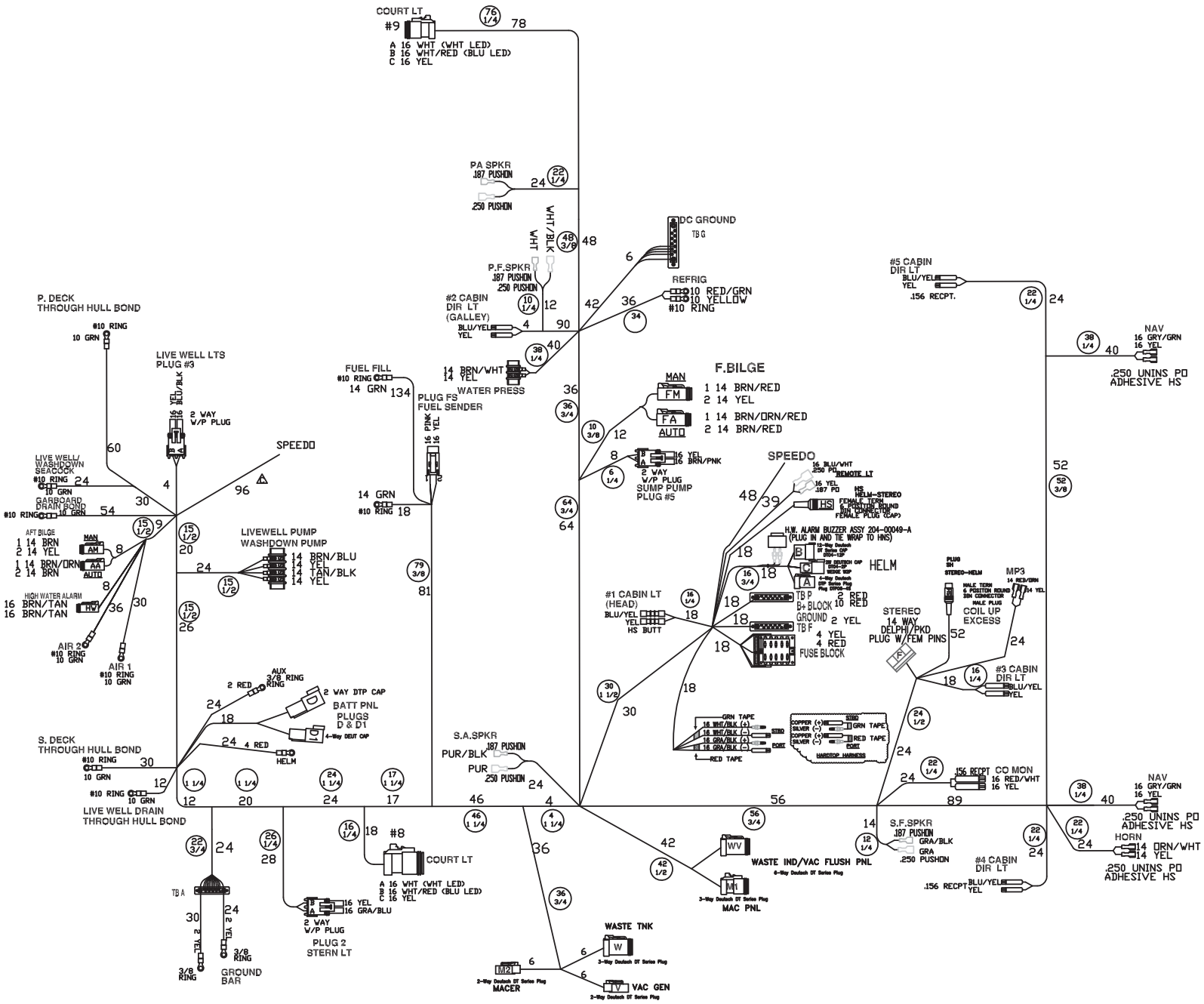
COURT LT
#9
A 16 WHT (WHT LED)
B 16 WHT/RED (BLU LED)
C 16 YEL
PA SPKR
.187 PUSHON
.250 PUSHON
DC GROUND
TB G
P.F.SPKR
.187 PUSHON
.250 PUSHON
REFRIG
10 RED/GRN
10 YELLOW
#10 RING
#2 CABIN
DIR LT
(GALLEY)
BLU/YEL
YEL
#5 CABIN
DIR LT
BLU/YEL
YEL
.156 RECPT.
NAV
16 GRY/GRN
16 YEL
.250 UNINS PO
ADHESIVE HS
P. DECK
THROUGH HULL BOND
#10 RING
10 GRN
LIVE WELL LTS
PLUG #3
2 WAY
W/P PLUG
FUEL FILL
#10 RING
14 GRN
PLUG FS
FUEL SENDER
14 BRN/WHT
14 YEL
WATER PRESS
F.BILGE
MAN
FM
1 14 BRN/RED
2 14 YEL
FA
AUTO
1 14 BRN/ORN/RED
2 14 BRN/RED
SPEEDO
LIVE WELL/
WASHDOWN
SEACOCK
#10 RING
10 GRN
GARBOARD
DRAIN BOND
#10 RING
10 GRN
14 GRN
#10 RING
2 WAY
W/P PLUG
SUMP PUMP
PLUG #5
SPEEDO
16 BLU/WHT
.250 PO
REMOTE LT
16 YEL
.187 PO
HS
HELM-STEREO
FEMALE TERM
6 POSITION ROUND
DIN CONNECTOR
FEMALE PLUG (CAP)
H.W. ALARM BUZZER ASSY 204-00049-A
(PLUG IN AND TIE WRAP TO HNS)
HELM
AFT BILGE
1 14 BRN
2 14 YEL
1 14 BRN/ORN
2 14 BRN
MAN
AM
AA
AUTO
LIVEWELL PUMP
WASHDOWN PUMP
14 BRN/BLU
14 YEL
14 TAN/BLK
14 YEL
HIGH WATER ALARM
16 BRN/TAN
16 BRN/TAN
HV
AIR 2
#10 RING
10 GRN
AIR 1
#10 RING
10 GRN
#1 CABIN LT
(HEAD)
BLU/YEL
YEL
HS BUTT
TB P
B+ BLOCK
GROUND
TB F
2 RED
10 RED
2 YEL
4 YEL
4 RED
FUSE BLOCK
STEREO
14 WAY
DELPHI/PKD
PLUG W/FEM PINS
MP3
COIL UP
EXCESS
#3 CABIN
DIR LT
BLU/YEL
YEL
AUX
3/8 RING
2 RED
RING
2 WAY DTP CAP
BATT PNL
PLUGS
D & D1
4-Way DEUT CAP
4 RED
HELM
S. DECK
THROUGH HULL BOND
#10 RING
10 GRN
#10 RING
10 GRN
LIVE WELL DRAIN
THROUGH HULL BOND
S.A.SPKR
.187 PUSHON
PUR/BLK
PUR
.250 PUSHON
GRN TAPE
RED TAPE
HARDTOP HARNESS
.156 RECPT
CO MON
16 RED/WHT
16 YEL
NAV
16 GRY/GRN
16 YEL
.250 UNINS PO
ADHESIVE HS
S.F.SPKR
.187 PUSHON
GRA/BLK
GRA
.250 PUSHON
HORN
14 ORN/WHT
14 YEL
.250 UNINS PO
ADHESIVE HS
#4 CABIN
DIR LT
.156 RECPT
BLU/YEL
YEL
WV
WASTE IND/VAC FLUSH PNL
6-Way Deutsch DT Series Plug
M1
3-Way Deutsch DT Series Plug
MAC PNL
#8
COURT LT
A 16 WHT (WHT LED)
B 16 WHT/RED (BLU LED)
C 16 YEL
TB A
2 YEL
3/8 RING
GROUND
BAR
2 WAY
W/P PLUG
PLUG 2
STERN LT
16 YEL
16 GRA/BLU
WASTE TNK
W
3-Way Deutsch DT Series Plug
M2
2-Way Deutsch DT Series Plug
MACER
V
VAC GEN
2-Way Deutsch DT Series Plug

Robalo 265

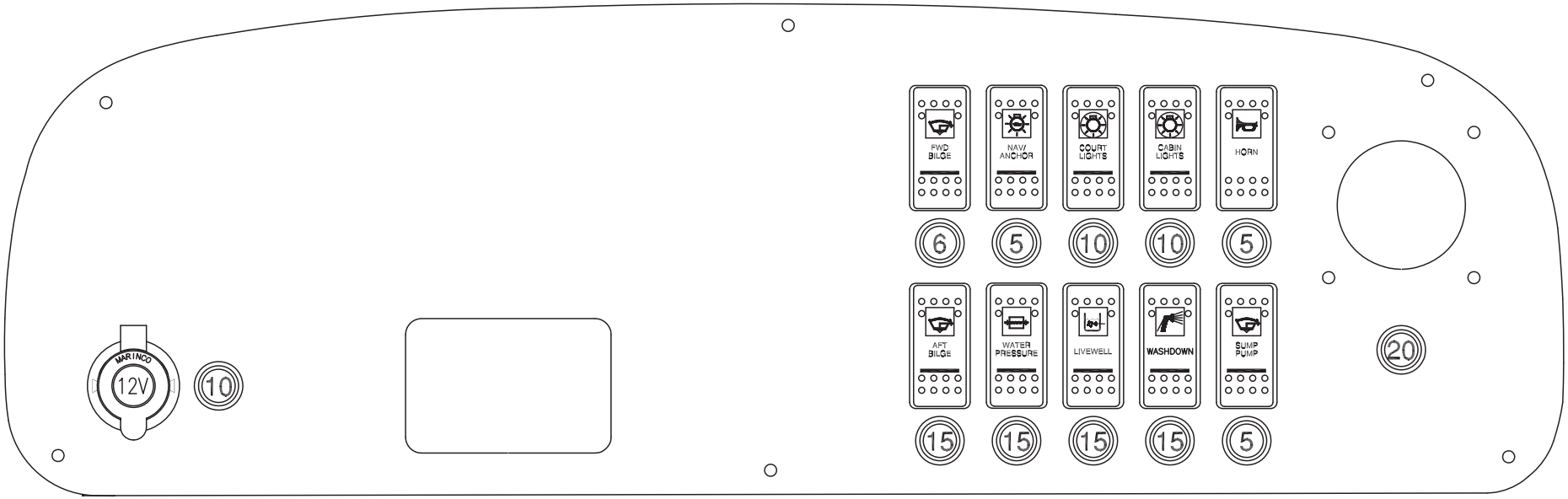
FWD BILGE
NAV/ ANCHOR
COURT LIGHTS
CABIN LIGHTS
HORN
6
5
10
10
5
AFT BILGE
WATER PRESSURE
LIVEWELL
WASHDOWN
SUMP PUMP
15
15
15
15
5
20
MARINCO
12V
10

Robalo 265

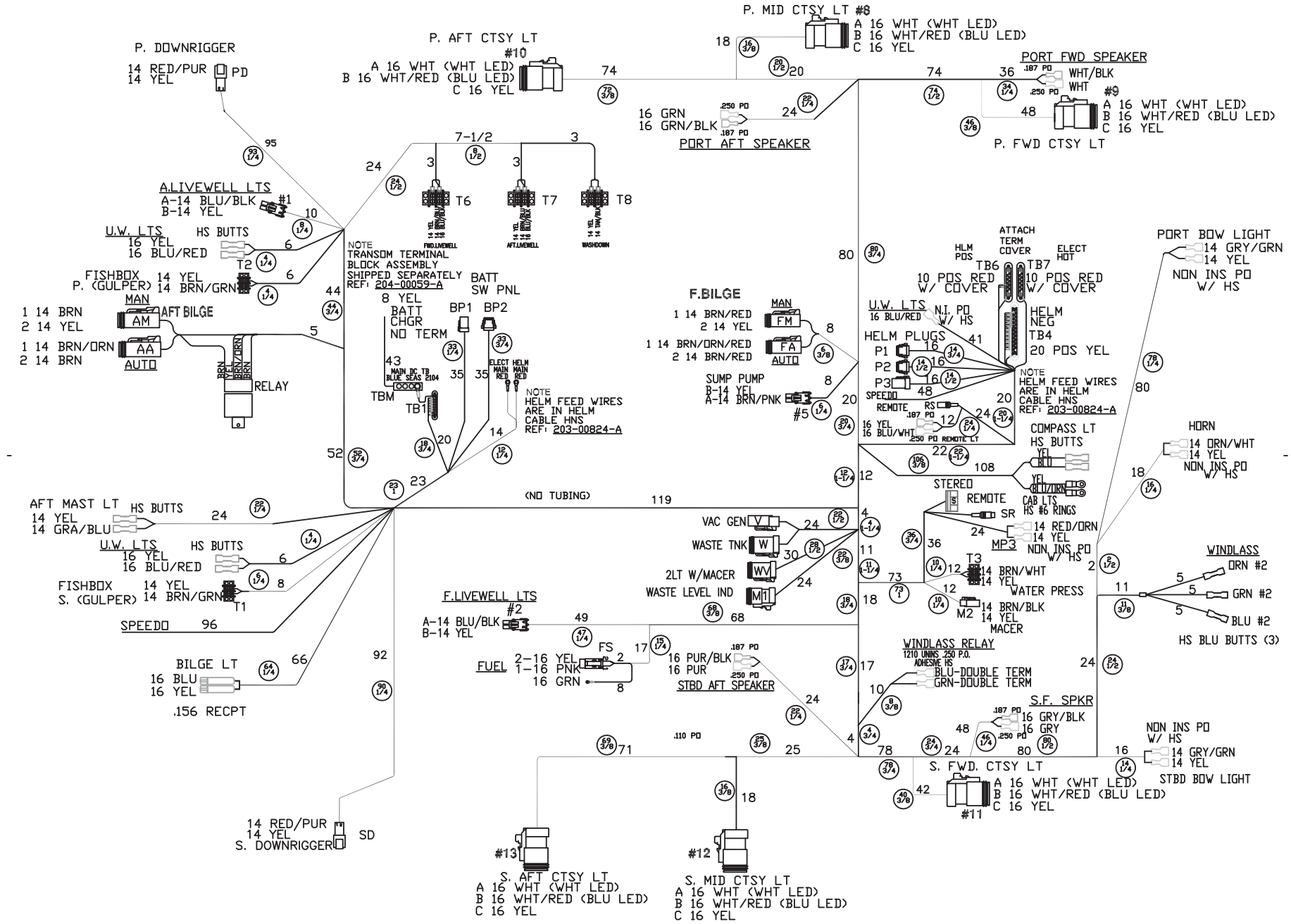
P. MID CTSY LT #8
A 16 WHT (WHT LED)
B 16 WHT/RED (BLU LED)
C 16 YEL
P. DOWNRIGGER
14 RED/PUR
14 YEL
PD
P. AFT CTSY LT
#10
A 16 WHT (WHT LED)
B 16 WHT/RED (BLU LED)
C 16 YEL
PORT FWD SPEAKER
WHT/BLK
WHT
#9
A 16 WHT (WHT LED)
B 16 WHT/RED (BLU LED)
C 16 YEL
P. FWD CTSY LT
16 GRN
16 GRN/BLK
PORT AFT SPEAKER
7-1/2
T6
T7
T8
A.LIVEWELL LTS
A-14 BLU/BLK
B-14 YEL
#1
U.W. LTS
16 YEL
16 BLU/RED
HS BUTTS
T2
FISHBOX
P. (GULPER)
14 YEL
14 BRN/GRN
MAN
AFT BILGE
AM
AA
AUTO
RELAY
NOTE
TRANSOM TERMINAL
BLOCK ASSEMBLY
SHIPPED SEPARATELY
REF: 204-00059-A
BATT
SW PNL
8 YEL
BATT
CHGR
NO TERM
BP1
BP2
TBM
TB1
NOTE
HELM FEED WIRES
ARE IN HELM
CABLE HNS
REF: 203-00824-A
F.BILGE
MAN
FM
FA
AUTO
SUMP PUMP
B-14 YEL
A-14 BRN/PNK
#5
ATTACH
TERM
COVER
HLM
POS
ELECT
HOT
TB6
TB7
10 POS RED
W/ COVER
U.W. LTS
16 BLU/RED
N.I. PO
W/ HS
HELM PLUGS
P1
P2
P3
HELM
NEG
TB4
20 POS YEL
SPEEDO
REMOTE
RS
16 YEL
16 BLU/WHT
REMOTE LT
NOTE
HELM FEED WIRES
ARE IN HELM
CABLE HNS
REF: 203-00824-A
PORT BOW LIGHT
14 GRY/GRN
14 YEL
NON INS PO
W/ HS
HORN
14 ORN/WHT
14 YEL
NON INS PO
W/ HS
COMPASS LT
HS BUTTS
YEL
BLU
YEL
BLU/ORN
CAB LTS
HS #6 RINGS
STEREO
REMOTE
SR
14 RED/ORN
14 YEL
MP3
NON INS PO
W/ HS
WINDLASS
ORN #2
GRN #2
BLU #2
HS BLU BUTTS (3)
AFT MAST LT
14 YEL
14 GRA/BLU
HS BUTTS
U.W. LTS
16 YEL
16 BLU/RED
HS BUTTS
FISHBOX
S. (GULPER)
14 YEL
14 BRN/GRN
T1
SPEEDO
(NO TUBING)
VAC GEN
V
WASTE TNK
W
2LT W/MACER
WV
WASTE LEVEL IND
M1
T3
14 BRN/WHT
14 YEL
WATER PRESS
M2
14 BRN/BLK
14 YEL
MACER
F.LIVEWELL LTS
#2
A-14 BLU/BLK
B-14 YEL
FS
FUEL
2-16 YEL
1-16 PNK
16 GRN
16 PUR/BLK
16 PUR
STBD AFT SPEAKER
WINDLASS RELAY
1210 UNINS .250 P.O.
ADHESIVE HS
BLU-DOUBLE TERM
GRN-DOUBLE TERM
S.F. SPKR
16 GRY/BLK
16 GRY
NON INS PO
W/ HS
14 GRY/GRN
14 YEL
STBD BOW LIGHT
S. FWD. CTSY LT
A 16 WHT (WHT LED)
B 16 WHT/RED (BLU LED)
C 16 YEL
#11
BILGE LT
16 BLU
16 YEL
.156 RECPT
14 RED/PUR
14 YEL
S. DOWNRIGGER
SD
#13
S. AFT CTSY LT
A 16 WHT (WHT LED)
B 16 WHT/RED (BLU LED)
C 16 YEL
#12
S. MID CTSY LT
A 16 WHT (WHT LED)
B 16 WHT/RED (BLU LED)
C 16 YEL

Robalo 300

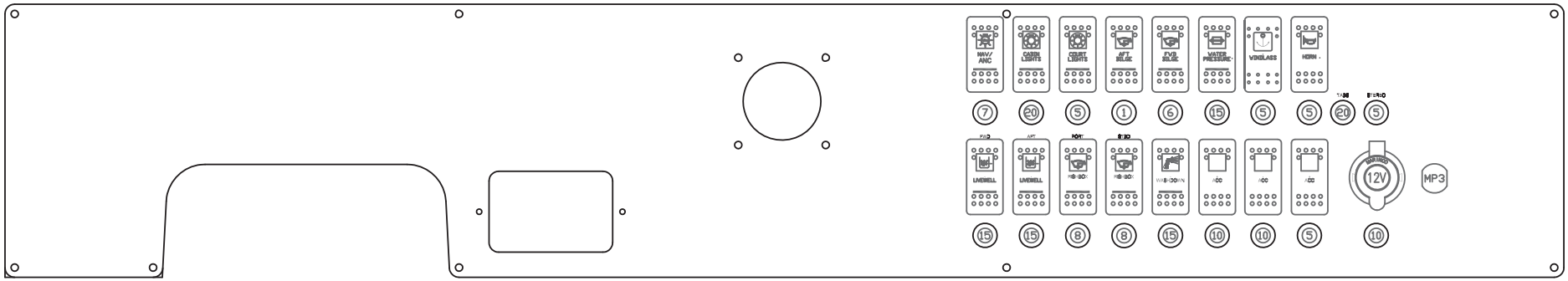
NAV/ ANC
CABIN LIGHTS
COURT LIGHTS
AFT BILGE
FWD BILGE
WATER PRESSURE
WINDLASS
HORN
TAGS
STEREO
LIVEWELL
LIVEWELL
PORT
STBD
WASHDOWN
ACC
ACC
ACC
12V
MP3

Roblao 300

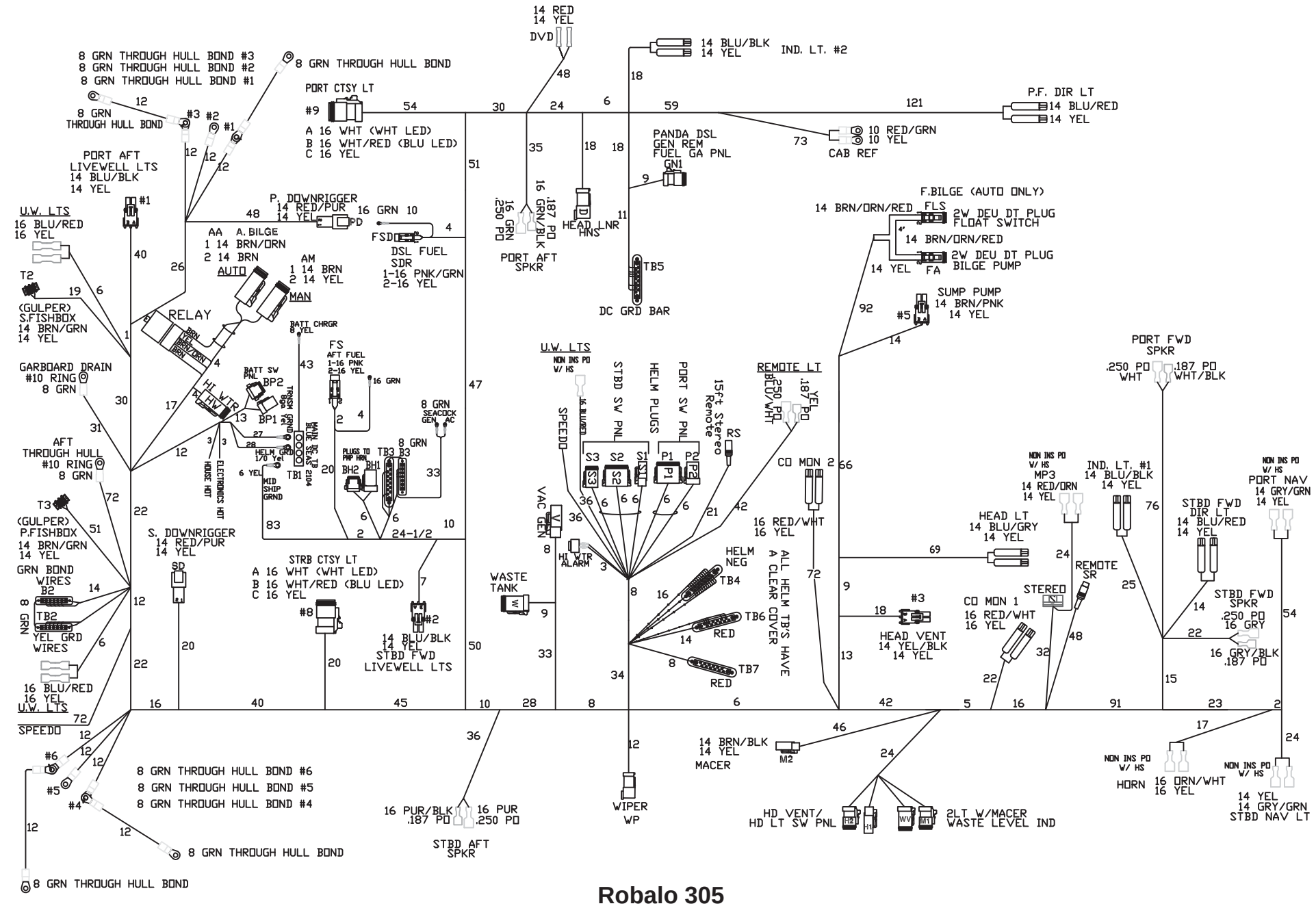
14 RED
14 YEL
DVD
14 BLU/BLK
14 YEL
IND. LT. #2
8 GRN THROUGH HULL BOND #3
8 GRN THROUGH HULL BOND #2
8 GRN THROUGH HULL BOND #1
8 GRN THROUGH HULL BOND
PORT CTSY LT
#9
A 16 WHT (WHT LED)
B 16 WHT/RED (BLU LED)
C 16 YEL
P.F. DIR LT
14 BLU/RED
14 YEL
10 RED/GRN
10 YEL
CAB REF
PANDA DSL
GEN REM
FUEL GA PNL
GN1
PORT AFT
LIVEWELL LTS
14 BLU/BLK
14 YEL
U.W. LTS
16 BLU/RED
16 YEL
P. DOWNRIGGER
14 RED/PUR
14 YEL
16 GRN 10
FSD
DSL FUEL
SDR
1-16 PNK/GRN
2-16 YEL
16 GRN
.250 PO
.187 PO
16 GRN/BLK
PORT AFT
SPKR
HEAD LNR
HNS
TB5
DC GRD BAR
F.BILGE (AUTO ONLY)
14 BRN/ORN/RED
FLS
2W DEU DT PLUG
FLOAT SWITCH
14 BRN/ORN/RED
2W DEU DT PLUG
BILGE PUMP
14 YEL
FA
SUMP PUMP
14 BRN/PNK
14 YEL
#5
T2
(GULPER)
S.FISHBOX
14 BRN/GRN
14 YEL
AA A. BILGE
1 14 BRN/ORN
2 14 BRN
AUTO
AM
1 14 BRN
2 14 YEL
MAN
RELAY
BATT CHRGR
8 YEL
FS
AFT FUEL
1-16 PNK
2-16 YEL
16 GRN
GARBOARD DRAIN
#10 RING
8 GRN
HI WTR
BATT SW
PNL
BP2
BP1
TRNSM GRND
MAIN DC TB
BLUE SEAS 2104
8 GRN
SEACOCK
GEN AC
AFT
THROUGH HULL
#10 RING
8 GRN
HELM GRD
170 Yel
6 YEL
MID
SHIP
GRND
TB1
PLUGS TO
PMP HRN
BH2
BH1
TB3
B3
8 GRN
ELECTRONICS HOT
HOUSE HOT
T3
(GULPER)
P.FISHBOX
14 BRN/GRN
14 YEL
GRN BOND
WIRES
B2
8 GRN
TB2
YEL GRD
WIRES
16 BLU/RED
16 YEL
U.W. LTS
SPEEDO
S. DOWNRIGGER
14 RED/PUR
14 YEL
SD
STRB CTSY LT
A 16 WHT (WHT LED)
B 16 WHT/RED (BLU LED)
C 16 YEL
#8
#2
14 BLU/BLK
14 YEL
STBD FWD
LIVEWELL LTS
U.W. LTS
NON INS PO
W/ HS
SPEEDO
STBD SW PNL
HELM PLUGS
PORT SW PNL
15ft Stereo
Remote
RS
REMOTE LT
.250 PO
BLU/WHT
.187 PO
YEL
CO MON 2
16 RED/WHT
16 YEL
VAC GEN
HI WTR
ALARM
WASTE
TANK
HELM
NEG
TB4
TB6
RED
TB7
RED
ALL HELM TB'S HAVE
A CLEAR COVER
PORT FWD
SPKR
.250 PO
WHT
.187 PO
WHT/BLK
NON INS PO
W/ HS
MP3
14 RED/ORN
14 YEL
IND. LT. #1
14 BLU/BLK
14 YEL
NON INS PO
W/ HS
PORT NAV
14 GRY/GRN
14 YEL
HEAD LT
14 BLU/GRY
14 YEL
STBD FWD
DIR LT
14 BLU/RED
14 YEL
REMOTE
SR
STEREO
CO MON 1
16 RED/WHT
16 YEL
#3
HEAD VENT
14 YEL/BLK
14 YEL
STBD FWD
SPKR
.250 PO
16 GRY
16 GRY/BLK
.187 PO
14 BRN/BLK
14 YEL
MACER
M2
8 GRN THROUGH HULL BOND #6
8 GRN THROUGH HULL BOND #5
8 GRN THROUGH HULL BOND #4
#6
#5
#4
8 GRN THROUGH HULL BOND
8 GRN THROUGH HULL BOND
16 PUR/BLK
.187 PO
16 PUR
.250 PO
STBD AFT
SPKR
WIPER
WP
HD VENT/
HD LT SW PNL
2LT W/MACER
WASTE LEVEL IND
NON INS PO
W/ HS
HORN
16 ORN/WHT
16 YEL
NON INS PO
W/ HS
14 YEL
14 GRY/GRN
STBD NAV LT

Robalo 305

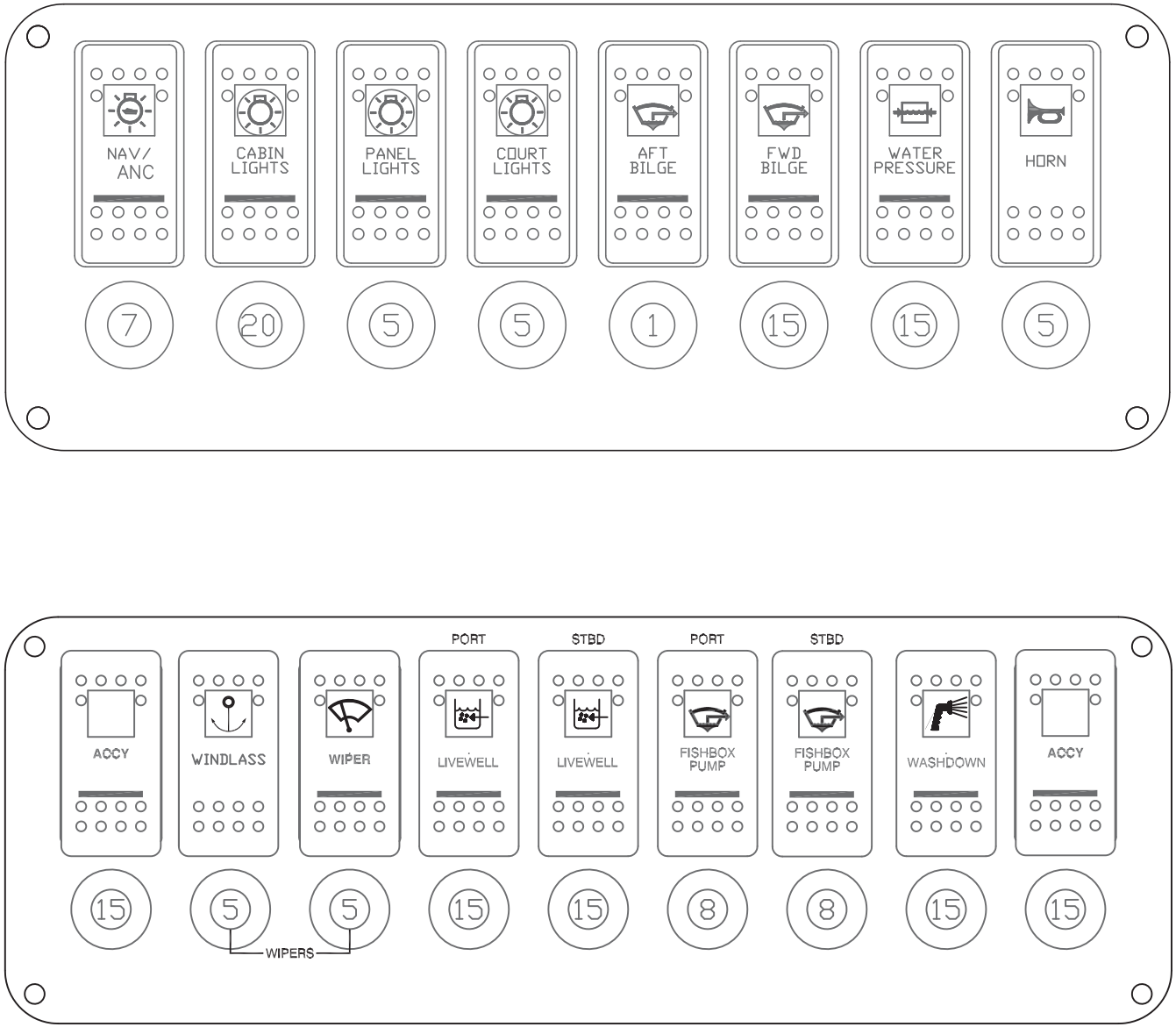
NAV/ ANC
CABIN LIGHTS
PANEL LIGHTS
COURT LIGHTS
AFT BILGE
FWD BILGE
WATER PRESSURE
HORN
7
20
5
5
1
15
15
5
ACCY
WINDLASS
WIPER
PORT
LIVEWELL
STBD
LIVEWELL
PORT
FISHBOX PUMP
STBD
FISHBOX PUMP
WASHDOWN
ACCY
15
5
5
WIPERS
15
15
8
8
15
15

Robalo 305