Operation & Maintenance Manual

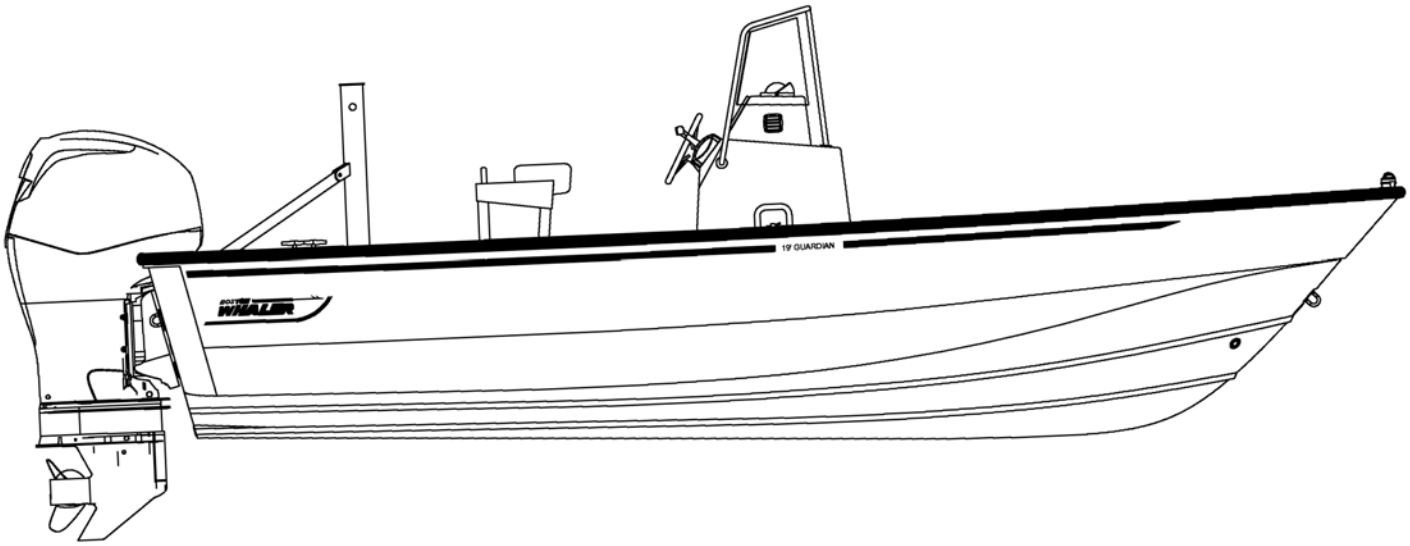

Boston Whaler®

19 Guardian® Series

© 2013 Brunswick Commercial & Government Products. All Rights Reserved.

420 Megan Avenue Edgewater Florida 32132 USA

Downloaded from www.Manualslib.com manuals search engine

Safety Notices

This manual uses three levels of notification for safety-related information.

The signal words **CAUTION**, **WARNING**, and **DANGER** identify specific levels of hazard. They are defined as:

⚠ CAUTION

A hazard that might result in injury or damage to property or equipment.

⚠ WARNING

A hazard that could result in death or serious injury.

⚠ DANGER

A hazard that will result in death or serious injury.

When you see a safety information box in this manual, carefully read the message **before** you proceed. Take these safety warnings seriously and be alert to the possibility of property damage, serious injury, or death.

If you do not understand a safety warning, call the Customer Service Department at Brunswick Commercial & Government Products.

About This Manual

The information and illustrations in this manual are protected by copyright. You may not merge, adapt, translate, modify, assign, store, reproduce, or distribute this manual's contents without written permission from Brunswick Commercial & Government Products. All rights related to this manual are reserved and protected by Brunswick Commercial & Government Products.

Brunswick Commercial & Government Products reserves the right to make changes at any time, without notice, to features, specifications, and model availability. The right is also reserved to change any specification, part, or system without incurring any obligation to update older boats.

The information in this manual is based on the latest specifications available at the time of publication. The photographs and illustrations might not depict actual models or equipment, but are intended as representative views for reference only. The continuing accuracy of this manual cannot be guaranteed.

Certain features, parts, options, systems, and accessories discussed in this manual might not be found on your boat.

Be sure that the operator and at least one other person in the boat are familiar with the contents of this manual. A second person should be able to safely operate the boat if the primary operator is not available.

Make this manual available to anyone who will operate this boat.

Warranty Information

Read the **Brunswick Commercial & Government Products** limited commercial warranty statement located on the inside rear cover of this manual. The statement explains what is covered and what is not covered under the warranty. The statement also explains your responsibilities and obligations as the boat owner.

A product registration card was shipped with your boat. Complete this card and mail it to Brunswick Commercial & Government Products using the postage-paid envelope supplied. We use this information to initiate your warranty coverage and to contact you in case of a safety-related issue with your boat.

Include your boat's **Hull Identification Number** (HIN) on the product registration card and anytime you contact the factory. See information about your boat's HIN in Section 6 of this manual.

Downloaded from www.Manualslib.com manuals search engine

Table of Contents

Section 1 - ⚠ Safety

Operator Responsibilities 1-1

Giving Assistance 1-1

Personal Flotation Devices 1-2

Exhaust Emissions 1-3

Fire Extinguishers 1-4

Fires 1-4

Severe Weather 1-5

EPIRB 1-5

Boat Load Capacities 1-6

Capsizing 1-6

Swamping 1-7

Diving Operations 1-7

Dive/Rescue Door 1-8

Proposition 65 Information 1-9

Deck Occupancy Chart 1-10

Warning Label Chart 1-12

Downloaded from www.Manualslib.com manuals search engine

Table of Contents

Section 2 - Boat Operation

Pre-operation Checklist 2-1
Ignition Shutoff Switch 2-2
Main Engine Key Switch 2-4
Battery Parallel Switch 2-6
Starting Procedure 2-7
Shift and Throttle Control 2-8
Shifting 2-8
Neutral Throttle 2-8
Speed Control 2-9
Engine Trim 2-9
Engine Gauges 2-11
Tachometer 2-11
Hour Meter 2-12
Fuel Gauge 2-12
Water Pressure Gauge 2-13
Voltmeter 2-13
Trim Gauge 2-14
SmartCraft Vessel View® System 2-15
Propellers 2-16
Maneuvering 2-18
Load Distribution 2-20
Boat Trim Tabs 2-21
Operation 2-22
Stopping Procedure 2-23
Trailering 2-24
Safety Checklist 2-26
Towing 2-27
Backing 2-28
Lifting and Slinging 2-29
Safety Warnings 2-29
Gunwale Lifting Eyes 2-30

Downloaded from www.Manualslib.com manuals search engine

Table of Contents

Section 3 - Fuel System

Safety Warnings 3-1

General Description 3-2

Fuel System Diagram 3-4

Racor® Gasoline Filter 3-7

Fuel Gauge and Sending Unit 3-8

Fill and Vent Locations 3-9

Bonding System 3-10

- Maintenance 3-10
- Repair 3-10

Fueling Procedures 3-11

- Safety Warnings 3-11
- Static Electricity 3-12
- General Guidelines 3-13

Hose Routing 3-14

Fill Hose Replacement 3-14

- Removal 3-14
- Installation 3-14

Vent Hose Replacement 3-15

- Removal 3-15
- Installation 3-15

Contaminated Gasoline 3-16

Blended Fuels 3-17

Downloaded from www.Manualslib.com manuals search engine

Table of Contents

Section 4 - Boat Systems

General Description 4-1

Console Layout 4-2

Deck Layout 4-4

Steering System 4-6

- Operation 4-7
- Going Ahead 4-7
- Going Astern 4-8

Steering System Diagram 4-9

Navigation Lights 4-10

- Operation 4-10

Bilge Pump 4-11

- Operation 4-12

Trim Tabs 4-13

- Trim Tab Control Box 4-14
- Proper Boat Trim 4-15
- Rough Water 4-15
- Trim Tabs and Engine 4-16

Compass 4-17

- Deviation 4-17
- Variation 4-17
- Night Lighting 4-17

Battery Parallel Switch 4-18

T-top Combination Light 4-19

Cockpit Lighting 4-19

Siren and Strobe Light 4-20

Floodlights 4-20

Signal Horn 4-21

Battery Status Indicator 4-21

- Bilge Pump Special 4-21

Towing System 4-22

- Towing a Boat 4-22
- Being Towed 4-23

Swimmer's Ladder 4-24

Downloaded from www.Manualslib.com manuals search engine

Table of Contents

Section 5 - Electrical Systems

General Description 5-1

Batteries 5-2

Safety Warnings 5-2

Capacities 5-3

Maintenance 5-3

Cleaning 5-4

Charging 5-5

Grounding and Bonding 5-6

Definitions 5-6

Grounding 5-6

Bonding 5-7

Battery Switches 5-8

Battery Parallel Switch 5-8

Battery OFF-ON Switches 5-9

Bilge Pump Special 5-9

DC Power Distribution 5-11

Outboard Engine 5-11

Bilge Pump 5-12

Helm Station Switch Panel 5-13

Accessory Fuse Block 5-14

T-top Fuse Block 5-15

Electronics Distribution Panel 5-16

DC Circuit Distribution 5-17

Helm Station Switch Panel 5-17

Accessory Fuse Block 5-19

T-top Fuse Block 5-19

Electronics Distribution Panel 5-19

Wire Color Chart 5-20

Downloaded from www.Manualslib.com manuals search engine

Table of Contents

Section 6 - Boat Maintenance

Specifications 6-1

Hull Identification Number 6-2

Options 6-3

Hull Maintenance 6-3

- Washing 6-3
- Waxing 6-4
- Compounding 6-4
- Gelcoat and Fiberglass Repair 6-4

Trim Care 6-5

- Aluminum 6-5
- Deck Hardware 6-5

Cutwater and Chafe Plates 6-6

Drains and Scuppers 6-6

Storage and Trailers 6-7

Trailer Setup 6-8

Fuel System 6-9

Steering System 6-10

- Approved Steering Fluids 6-11

Batteries 6-12

- Safety Warnings 6-12
- Capacities 6-13
- Maintenance 6-13
- Cleaning 6-14

Bilge Pump 6-15

Trim Tabs 6-15

Off-Season Storage 6-16

- Outboard 6-16
- Batteries 6-16
- Fuel System 6-17
- Hull Drainage 6-18
- Raw Water Washdown System 6-18

Downloaded from www.Manualslib.com manuals search engine

Operator Responsibilities

It is expected by **Brunswick Commercial & Government Products** (BCGP) that the personnel authorized to operate this boat are experienced boat handlers familiar with high-performance boating. BCGP cannot predict, nor warn against, every possible hazardous situation related to the operation and maintenance of this boat.

If you use a method or procedure different from one outlined in this manual, you must satisfy yourself that your method or procedure will not put your boat, your crew, or other boaters at risk.

The safety of this boat and its crew is your responsibility. Always follow these general guidelines when operating this boat:

- Always operate this boat within the limits of your skill and experience. If you do not have the appropriate level of experience, ask someone to instruct you.
- Understand all of the information contained in this manual, particularly Sections 1 and 2
- Understand the operation of all boat controls and systems
- Understand and follow all applicable boating regulations
- Always use safety equipment and operating procedures that are appropriate for your mission
- Never work alone around machinery such as outboard engines, generators, and fire pumps

Giving Assistance

The **1971 Federal Boat Safety Act** grants protection to any person who offers good faith assistance to another boater who is in distress. The “Good Samaritan” rule will protect you from liability if you act in a reasonable and prudent manner while attempting to render assistance during a boating emergency.

You should attempt to give assistance when you see a distress signal while boating if you can do so without endangering your boat or your crew.

Downloaded from www.Manualslib.com manuals search engine

Personal Flotation Devices

Personal Flotation Devices (PFDs) are designed to save lives. It is your responsibility to ensure that the boat has a sufficient number of PFDs for your crew. It is your responsibility to ensure that non-swimmers wear PFDs at all times and that everyone wears a PFD during emergencies, special operations, and severe weather.

The United States Coast Guard recognizes four types of wearable devices and one type of throwable device.

- **Type I –** Life preserver, appropriate for off-shore and foul weather.
- **Type II –** Buoyant vest, appropriate for near-shore and inland waters.
- **Type III –** Flotation aid, appropriate for continuous use in calm inland waters.
- **Type IV –** Throwable device, appropriate to throw to a person already in the water. These devices must never be worn as a vest.
- **Type V –** Special-purpose device; includes harnesses, certain jackets, and rafting vests. These vests must be worn while underway to count toward minimum PFD requirements.

All PFDs must be easily accessible. They must be removed from their shipping bags and they should be unbuckled. Make sure that everyone knows where the PFDs are located. Make sure that everyone knows how to put one on and correctly adjust it.

Check the availability and condition of all PFDs before each mission.

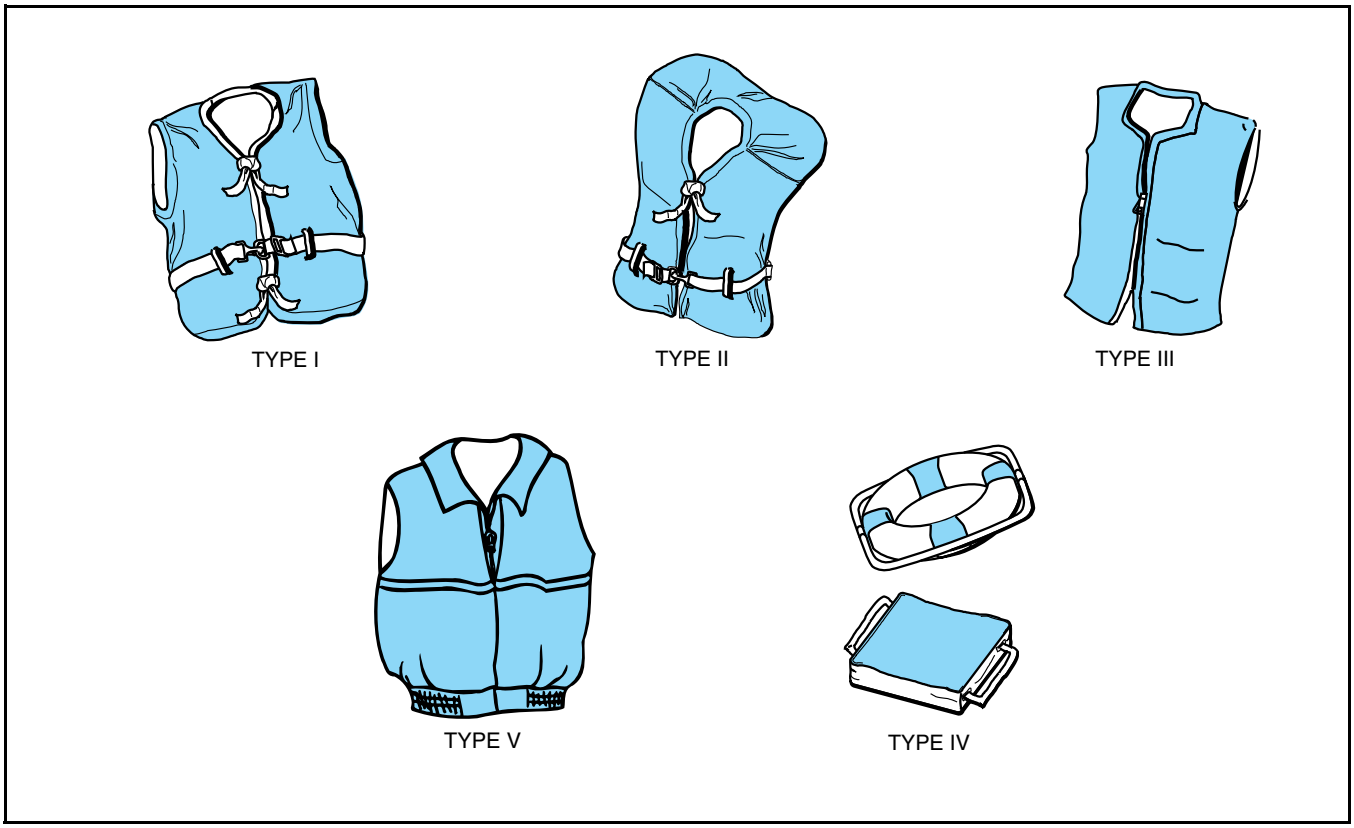

Downloaded from www.Manualslib.com manuals search engine

Exhaust Emissions

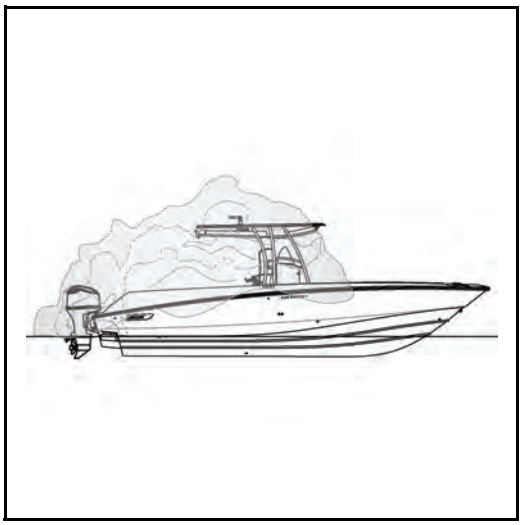

Gasoline-powered engines produce carbon monoxide when they are running. Carbon monoxide is a colorless and odorless gas. It is extremely toxic.

Always be aware of operating conditions that might allow carbon monoxide to collect in occupied spaces on your boat. Remember these general precautions:

- Avoid running engines or generator in confined areas such as boat houses
- Be aware of other boats when you are moored
- Be aware of wind direction when operating at slow speeds
- Adjust hatches, doors, windows, and canvas to increase air movement in confined spaces when engines and generator are running

⚠ DANGER

Prolonged exposure to carbon monoxide can cause serious injury or death. Always insure that confined spaces in your boat have an adequate supply of fresh air.

For more information about the dangers of carbon monoxide, read the booklet **What You Can't See** that is in your owner's bag.

Downloaded from www.Manualslib.com manuals search engine

Fire Extinguishers

Your boat is equipped with at least two 2¾-pound United States Coast Guard approved Type ABC fire extinguishers. Each extinguisher is UL Rated 1-A:10-BC. This rating indicates that each extinguisher can be used to fight Class A, B, and C fires. These classes include fires involving wood, cloth, gasoline, oil, grease, and live electrical equipment.

The fire extinguishers are mounted in locations that allow quick access in case of a fire emergency. **Be familiar with these locations.** Read and understand the instructions on the extinguisher label and in the manufacturer's instruction booklet located in your owner's bag.

Formulate a fire plan in advance that will help you evaluate your risk and response in case of an on-board fire emergency.

Fires

Most marine fires result from spilled gasoline or oil accumulating in the bilge. Careful use of on-board fire extinguishers should control small fires.

Direct the fire extinguisher output toward the base of the flames in a sweeping motion. Check carefully and verify that the fire has been extinguished. Evaluate the damage and get assistance immediately.

Larger fires involving the boat's fuel tank might result in explosion and complete destruction of the boat. Formulate a fire plan in advance that will help you decide if you can fight the fire or if you should abandon the boat.

⚠ WARNING

Gasoline floats on water. If you abandon the boat, swim up wind or up current from the boat to avoid burning gasoline that might spread on the surface of the water.

Downloaded from www.Manualslib.com manuals search engine

Severe Weather

Take these general safety precautions if you must operate your boat in severe weather conditions:

- Review the condition and operation of all safety and communication gear
- Have everyone wear personal floatation devices
- Use your ignition shutoff clip and lanyard
- Stow loose gear and lash down equipment
- Close all hatches, doors, and windows
- Install the dive door, if equipped
- Reduce boat speed
- Periodically report your location and situation by radio
- Monitor marine weather advisories

EPIRB

Your boat might be equipped with an emergency position-indicating radio beacon (EPIRB).

The EPIRB is capable of sending important location information to the **Cospas-Sarsat** satellite system during an emergency. You must register the EPIRB with the National Oceanic & Atmospheric Administration (NOAA) to ensure an effective search and rescue response.

In case of an emergency, the beacon can be deployed manually or it can be released by a hydrostatic feature if the boat sinks.

The EPIRB requires regular attention to stay in mission-ready condition:

- Every 30 days – perform self-test procedure
- Every 90 days – inspect category 1 bracket
- Every 2 years – replace HRU unit
- Every 5 years – replace EPIRB battery

Refer to the EPIRB operator's manual for detailed operation and maintenance information.

Downloaded from www.Manualslib.com manuals search engine

Boat Load Capacities

The United States Coast Guard requires boats less than 20 feet (6 m) to display a capacity plate that indicates the maximum number of people and the maximum weight that the boat can support under normal operating conditions. Additional capacity information for your boat is listed in Section 6 of this manual.

- Do not exceed the capacity limits of this boat under any circumstances
- Consider reducing these capacity limits during emergencies, special operations, and severe weather
- You are always responsible for the safety of the boat and its crew even if the capacity limits have not been exceeded

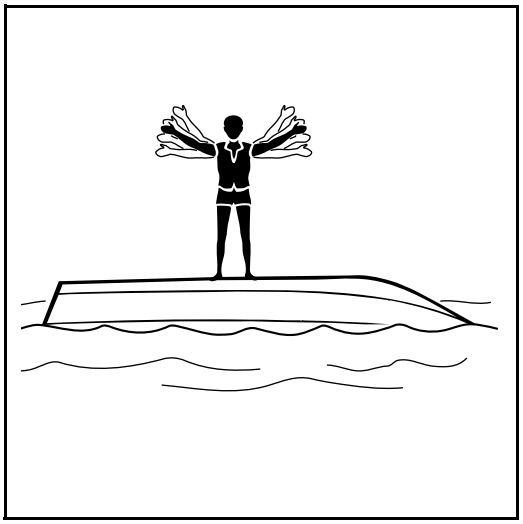

⚠ WARNING

The dive/rescue door is a specialized piece of rescue equipment. All posted USCG and NMMA load capacities are suspended when the dive/rescue door is out. Operate your boat carefully to avoid swamping or capsizing.

Capsizing

Your boat might capsize due to improper loading, improper operation, or severe weather conditions. Formulate a capsizing plan in advance that includes the following actions:

- Try to turn off the outboard engines to avoid injury and additional damage
- Locate all crew and evaluate their condition
- Stay with the boat, it will always float and it is easier to locate
- Distribute PFDs if possible
- Try to climb onto the hull
- Initiate emergency locating signal or radio communication if possible

Downloaded from www.Manualslib.com manuals search engine

Swamping

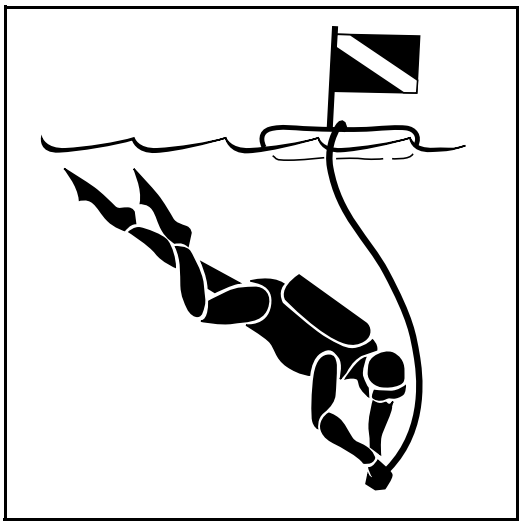

Swamping (flooding the interior of the boat) can occur for a number of reasons, including severe weather conditions, improper operation, and improper loading. Consider the following:

- Know the safe loading limits for this boat under normal conditions. Refer to the boat specifications in Section 6 of this manual and the Certification Plate in the boat.
- Consider reducing those loading limits during emergencies, special operations, and severe weather.
- Distribute any load or cargo evenly front to back and port to starboard so that the approximate center of the load is near the middle of the boat.
- Close all hatches, doors, and windows during severe weather.
- Install the dive door, if equipped.
- Adjust boat trim and speed to match weather conditions.
- Avoid backing into large waves whenever possible.
- Check operation of all bilge pumps, float switches, and water level sensors before each trip.

Diving Operations

⚠ DANGER

Never start or operate the engine when people are in the water near your boat. Contact with the boat, engine, or rotating propeller can cause serious injury or death.

Navigational Rules require a vessel which is engaged in diving operations to display a rigid replica of the international **Alpha** signal flag during daylight hours. During night operations, you would display **RIAM** lights on a special display mast. Both these displays indicate that your boat is operating with restricted maneuverability.

Some local or state regulations might require the red and white diver's flag during daylight hours to indicate that a person is in the water.

Downloaded from www.Manualslib.com manuals search engine

Dive/Rescue Door

Your boat might be equipped with a dive/rescue door. The dive/rescue door can expand your operational capabilities by providing easy access to the water and to the boat.

Operating a Boston Whaler when the dive/rescue door is **out** requires experience and a high level of skill. Always operate any boat within the limits of your experience. If you do not have this experience, ask someone to instruct you or gain experience through experimentation under controlled conditions.

⚠ WARNING

The dive/rescue door is a specialized piece of rescue equipment. All posted USCG and NMMA load capacities are suspended when the dive/rescue door is out. Operate your boat carefully to avoid swamping or capsizing.

⚠ DANGER

Always monitor the amount of water on the deck while the dive/rescue door is out. An unexpected shift in water weight might cause your boat to capsize.

Water can come into the boat when the dive/rescue door is removed. You must manage the water, the rescue operation, and all personnel to avoid swamping or capsizing your boat. Refer to **Load Distribution** in Section 2 for additional information.

When your dive/rescue door is in place, it must be secured with the cam locks provided. When your dive/rescue door is out, it must be stored and secured in the storage blocks provided.

Downloaded from www.Manualslib.com manuals search engine

Proposition 65 Information

The following information is included in this manual as recommended by **California's Safe Drinking Water and Toxic Enforcement Act of 1986**, amended through Proposition 65.

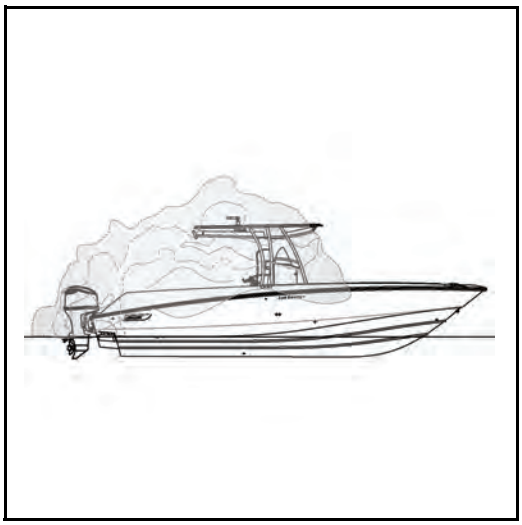

⚠ WARNING

A wide variety of components used on this boat contains or emits chemicals known to the State of California to cause cancer, birth defects, and other reproductive harm.

Examples include:

- **Engine and generator exhaust**
- **Gasoline, diesel fuel, coolants, and motor oil**
- **Cooking fuels**
- **Cleaners, solvents, and paint**
- **Waste materials that result from wear of boat components**
- **Lead from battery terminals and other sources**

To avoid harm:

- **Keep away from engine, generator, and cooking fuel exhaust fumes**
- **Wash areas thoroughly with soap and water after handling the substances listed in this warning**

Downloaded from www.Manualslib.com manuals search engine

Deck Occupancy Chart

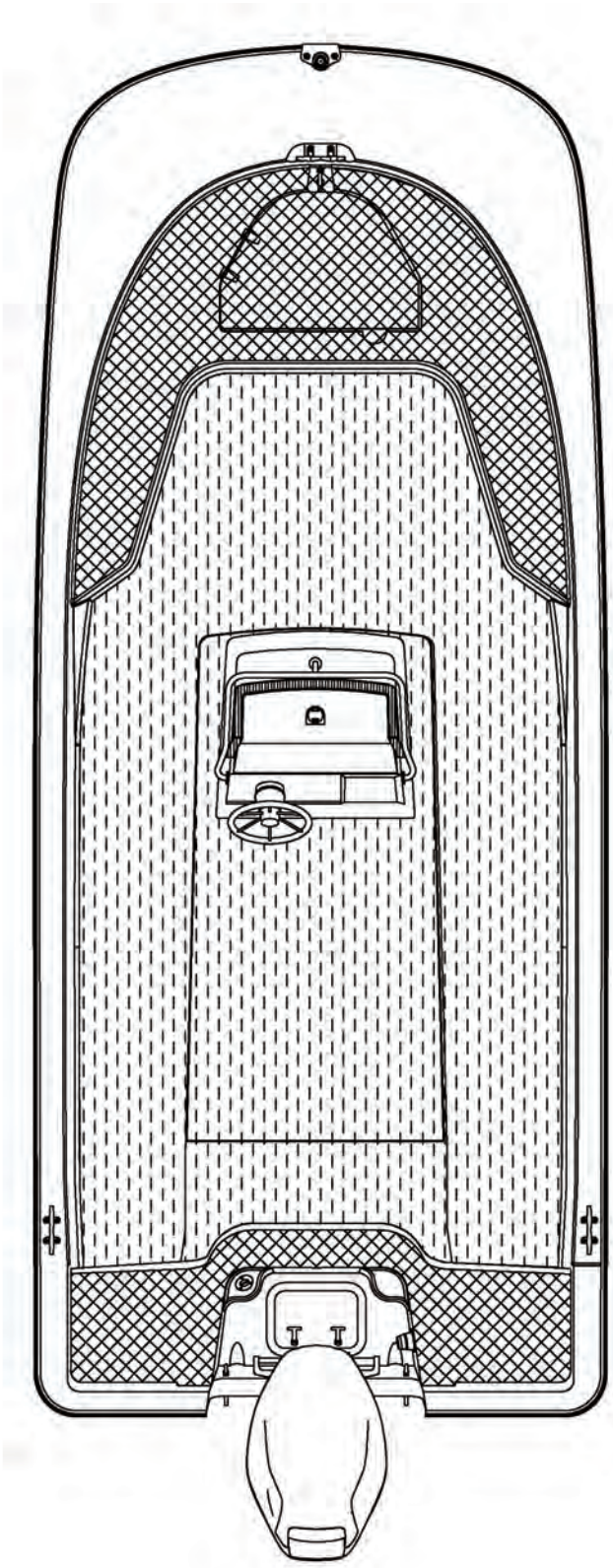

Downloaded from www.Manualslib.com manuals search engine

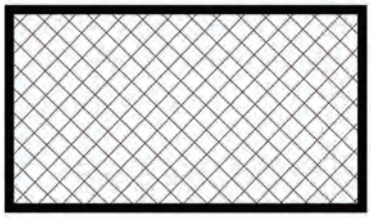

Working Decks: Do not allow passengers on these decks while the boat is underway. These decks can only be used when you are at the dock, mooring, or anchoring.

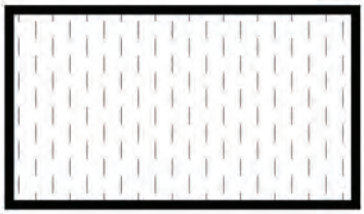

Accommodation Decks: You can allow passengers to move around these decks while the boat is underway. You must continually evaluate the sea state and boat performance. Restrict passenger access to these decks if conditions warrant. Keep accommodation decks free of loose gear.

⚠ WARNING

Gelcoat surfaces are always slippery when wet. Use extreme caution when walking on wet surfaces to avoid slipping or falling. Never wax portions of the boat that have a non-skid pattern.

⚠ DANGER

Never occupy working decks while the boat is underway. Do not sit on the gunwales or any part of a working deck while the boat is underway.

Downloaded from www.Manualslib.com manuals search engine

Warning Label Chart

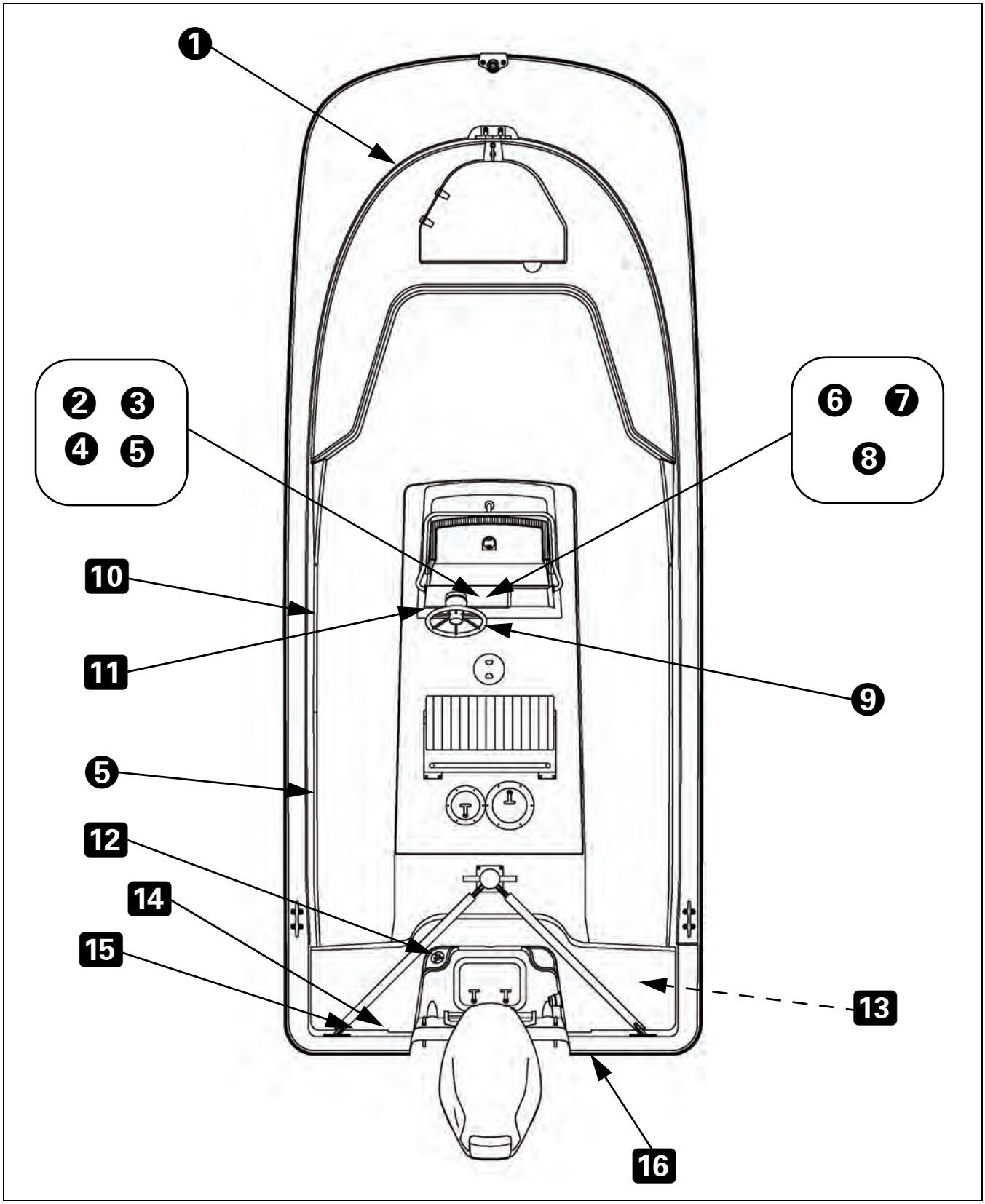

Downloaded from www.Manualslib.com manuals search engine

1	1017078	Do Not Stand
2	1017136	Hi-performance Boat
3	1950698	Rotating Propellers
4	1016518	Steering Effort
5	2090315	Dive/Rescue Door
6	1016534	Fuel Tank Readings
7	1811368	Carbon Monoxide
8	1974618	U.S. EPA Compliant
9	1817722	Customer Information Tag
10	2025462	NMMA Capacity Plate
11	1016443	Do Not Drill (Fuel Tank)
12	0995704	Fuel Fill
13	1016922	Battery Terminals
14	1811367	Carbon Monoxide
15	1903624	Rotating Propellers
16	1016880	Do Not Paint (Bonding Plate)

Downloaded from www.Manualslib.com manuals search engine

Operator Notes

Downloaded from www.Manualslib.com manuals search engine

Pre-operation Checklist

Review all the items on this checklist each time you prepare for a mission. Resolve any issues before you begin your mission.

- ❑ Drain plug installed in hull
- ❑ Submit mission plan to officer-in-charge
- ❑ Verify trip routing and navigational information
- ❑ Check regional weather advisories
- ❑ Operator's manual on-board
- ❑ Safety equipment on-board
- ❑ Hull in mission-ready condition
- ❑ VHF and HF radios operational
- ❑ GPS unit operational
- ❑ EPIRB in mission-ready condition
- ❑ Radar operational
- ❑ Adequate fuel load for mission
- ❑ Fuel tank and fuel hoses good condition
- ❑ Fuel filter in good condition
- ❑ No water in water separator
- ❑ Navigation lights operational
- ❑ RIAM lights operational
- ❑ Signal horn operational
- ❑ Bilge pump operational
- ❑ Bilge pump float switch operational
- ❑ Water level sensor operational
- ❑ Engine starting battery in good condition
- ❑ House battery in good condition
- ❑ Battery OFF-ON switches correctly set
- ❑ Engine control lever in NEUTRAL
- ❑ Ignition shutoff clip and lanyard in place
- ❑ Engine in full Tilt Down position
- ❑ Engine operational and normal
- ❑ Steering system operational and normal

⚠ CAUTION

Test your bilge pump and float switch before each mission. Manually activate the float switch when the rocker switch is in the AUTO position and verify pump operation. Clear away any debris that might restrict the pump or float switch.

Downloaded from www.Manualslib.com manuals search engine

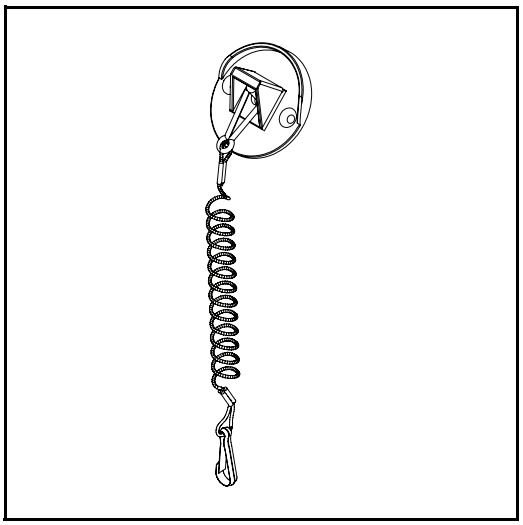

Ignition Shutoff Switch

Your boat is equipped with one ignition shutoff switch. The ignition shutoff switch is located on the control console face.

The ignition shutoff switch is designed to shut off the outboard engine if you move away from the helm station by accident, either by falling down or by being ejected from the helm seat. Both of these situations can be caused by unsafe operating techniques or severe operating conditions. Do not use the ignition shutoff switch to stop the outboard engine during normal boat operation.

⚠ WARNING

Do not activate the ignition shutoff switch during normal operations when the boat is on plane. Activating the ignition shutoff switch at planing speeds will cause the boat to suddenly decelerate, possibly injuring or ejecting passengers.

You should connect the ignition shutoff switch clip and lanyard to a sturdy part of your clothing. If you move beyond the scope of the lanyard, the ignition shutoff switch will be activated and the outboard engine will shut off immediately.

Downloaded from www.Manualslib.com manuals search engine

Understand this important information about your ignition shutoff switch:

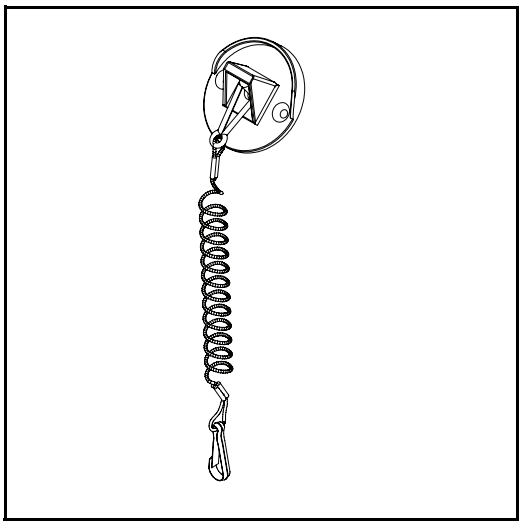

- It is your responsibility to decide when to attach the switch lanyard, but we strongly recommend that you use the shutoff switch anytime you are operating the boat.
- Test the ignition shutoff switch periodically by pulling the clip and lanyard while the outboard engine is at idle speed. The outboard engine should stop immediately.
- The outboard engine will not start if the clip and lanyard is not attached to the shutoff switch.
- The switch can only function properly when the lanyard is attached to a sturdy part of your clothing.
- Do not shorten the switch lanyard. It must be long enough to avoid inadvertent switch activation during normal operator activity.
- Refer to the outboard engine operator's manual for specific information about the ignition shutoff switch.

Downloaded from www.Manualslib.com manuals search engine

Main Engine Key Switch

Your boat is equipped with one main engine key switch. The key switch is located on the control console face. The key switch controls the starting, running, and stopping of the outboard engine. The key switch also controls the operation of certain engine accessory systems.

The switch has a unique key that can only be removed when the switch is in the OFF position. Record and save the key number following the instructions in Section 6.

⚠ DANGER

Never start or operate the engine when people are in the water near your boat. Contact with the boat, engine, or rotating propeller can cause serious injury or death.

- You must turn the engine battery OFF-ON switch to the ON position before you use the main engine key switch.
- You must turn the main engine key switch to the OFF position after you secure the engine from service.
- You should turn the engine battery OFF-ON switch to the OFF position after you secure the engine from service.

Downloaded from www.Manualslib.com manuals search engine

To **START** the outboard engine, the control lever must be in the NEUTRAL position. The ignition shutoff switch clip and lanyard must be attached to the shutoff switch. Turn the main engine key switch to the ON position and then to the START position. **DO NOT** hold the key in the START position. The engine's electronic control module (ECU) will start the engine automatically. If the outboard engine does not start, turn the key to the OFF position and repeat the starting process.

To **STOP** the outboard engine, turn the main engine key switch to the ACC or OFF position. If you are securing the engine from service, turn the main engine key switch to the OFF position.

⚠ CAUTION

Leaving the main engine key switch in the ACC or ON position when the engine is not running will drain the starting battery and might damage the engine's electrical systems.

For additional engine control information, refer to the engine operator's manual in your owner's bag.

Downloaded from www.Manualslib.com manuals search engine

Battery Parallel Switch

Your boat is equipped with an emergency battery parallel switch. The switch is located on the control console face. You can use the emergency battery parallel switch to connect the house battery and the engine starting battery in parallel if the outboard engine will not start due to low battery voltage.

The battery parallel switch controls a solenoid that connects the two batteries. The switch is a three-position rocker switch that is ON-OFF-ON. The center switch position is OFF. Both the left and right switch positions are momentarily ON when held down. When you release the switch, it will return to the center OFF position.

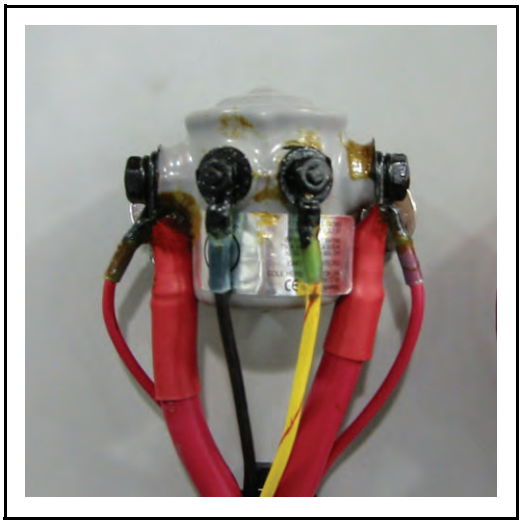

If your outboard engine will not start due to low battery voltage, use the battery parallel switch to provide power from the house battery.

Push and hold the battery parallel switch ON to either the left or right position. Note this position. Hold the battery parallel switch in the ON position and try to start the engine.

If the engine does not start, release the battery parallel switch to the OFF position. Move the battery parallel switch to ON in the opposite direction. Hold the battery parallel switch in the ON position and try to start the engine.

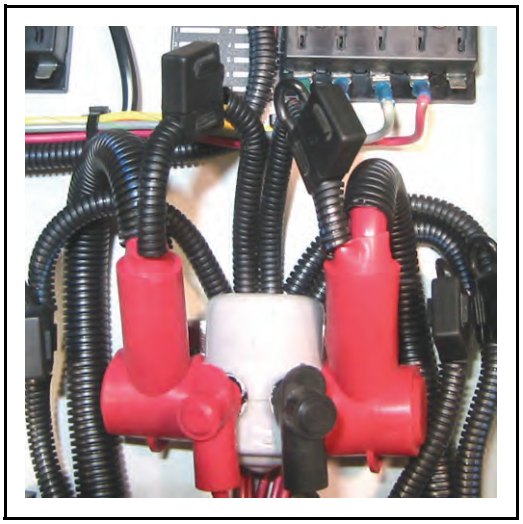

The emergency battery parallel system is protected by two 10-amp in-line blade fuses wired to the load sides of both battery OFF-ON switches. The two in-line blade fuses protect the electrical wiring between the solenoid and battery parallel switch.

Periodically check the condition of the two 10-amp in-line blade fuses located next to the parallel solenoid. One blown fuse would not allow the battery parallel solenoid to function in one switch position.

Downloaded from www.Manualslib.com manuals search engine

Starting Procedure

Use the following checklist each time you start the outboard engine. Additional detailed information about these systems is covered in the engine operator's manual.

⚠ DANGER

Never start or operate the engine when people are in the water near your boat. Contact with the boat, engine, or rotating propeller can cause serious injury or death.

⚠ CAUTION

Never start or run the outboard engine without an adequate supply of cooling water. The engine will be damaged immediately.

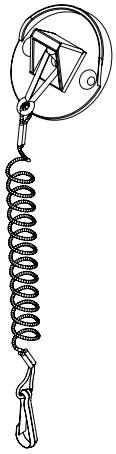

- ❑ Operator's manual on-board
- ❑ Review **Pre-operation Checklist**
- ❑ Engine battery OFF-ON switch to ON position
- ❑ House battery OFF-ON switch to ON position
- ❑ Release engine tilt lock and lower engine to full Tilt Down position
- ❑ Verify fuel supply
- ❑ Move engine control lever to NEUTRAL position
- ❑ Attach ignition shutoff switch clip and lanyard
- ❑ Start outboard engine using the main engine key switch
- ❑ Use emergency battery parallel switch if required
- ❑ Verify engine cooling system operation by observing the overboard indicator
- ❑ Verify all engine systems using the gauges
- ❑ Let outboard engine idle in NEUTRAL for five minutes before leaving the dock

Downloaded from www.Manualslib.com manuals search engine

Shift and Throttle Control

Boat direction, boat speed, and close-quarter maneuvering are controlled by the single-lever control. The single-lever control includes gear selection, engine speed, and engine trim angle functions. Additional detailed information about your single-lever control is covered in the engine operator's manual.

Shifting

- The shift lever controls gear selection for the outboard engine. The shift lever must be in NEUTRAL before starting engine. The engine will not start if the shift lever is in FORWARD or REVERSE.
- The engine must be running before you shift into FORWARD or REVERSE.
- From NEUTRAL, move the shift lever forward to select FORWARD gear.
- From NEUTRAL, move the shift lever backward to select REVERSE gear.
- Never shift directly from FORWARD to REVERSE without pausing in NEUTRAL.
- Never shift directly from REVERSE to FORWARD without pausing in NEUTRAL.

⚠ CAUTION

Shifting the engine from FORWARD to REVERSE at any boat speed above idle can cause catastrophic engine damage. This engine damage can include gearcase failure or water ingestion.

Neutral Throttle

- The single-lever control has a neutral throttle feature. Depress the **Throttle Only** button and move the shift lever forward to increase engine speed in NEUTRAL. The warning horn will beep and the red Neutral LED will flash, indicating that the neutral throttle feature is selected.
- Move the shift lever back to NEUTRAL to disengage the neutral throttle feature.

Downloaded from www.Manualslib.com manuals search engine

Speed Control

- Move the shift lever forward from the FORWARD gear detent to increase engine speed in forward gear.
- Move the shift lever backward from the REVERSE gear detent to increase speed in reverse gear.

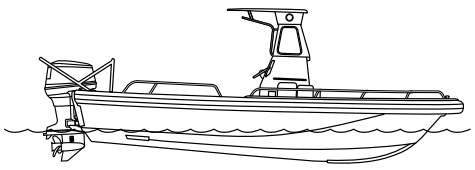

Engine Trim

⚠ WARNING

Certain combinations of engine trim angle, boat operating angle, and boat speed can reduce your forward-facing visibility. Reduced operator visibility can contribute to collisions, causing serious injury or death.

Trimming the engine **down or in** is best for acceleration and carrying heavy loads. The boat ride tends to be slower and wetter, and the boat might bow steer.

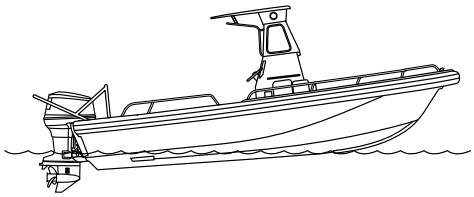

Trimming the engine **up or out** increases boat performance and fuel economy. Excessive trim angle will reduce boat performance. Excessive trim angle might cause propeller ventilation and engine over-speed alarms.

⚠ WARNING

Excessive engine trim angle can cause the boat to “porpoise” or bounce. Porpoising can reduce operator control and visibility, resulting in unsafe boat operation.

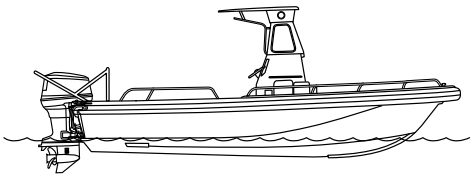

Downloaded from www.Manualslib.com manuals search engine

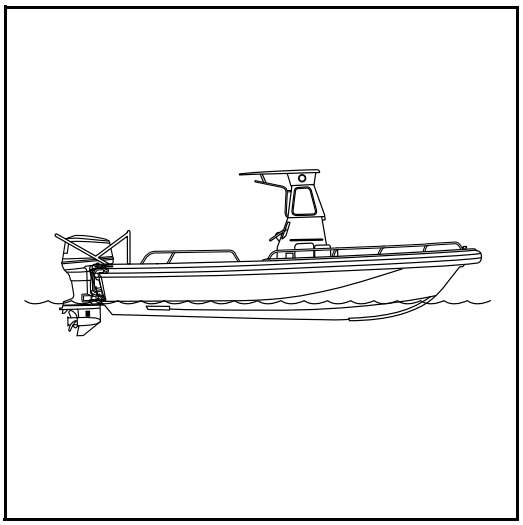

You must determine the correct engine trim adjustments through experimentation or experience, based on your mission loads and operating conditions.

- Your single-lever control has an engine trim switch located on the control lever.
- The trim switch moves the outboard engine through its trim range to change general boat operating angle.
- Adjusting engine trim angle can affect ride comfort and boat performance. 4° “bow up” is an average setting for boat operating angle.
- Adjusting engine trim angle can improve fuel economy, improve ride comfort, and compensate for uneven boat loading.

⚠ CAUTION

Do not trailer your boat with the engine in its fully tilted position.

⚠ CAUTION

Center the engine before tilting to avoid contact with any special towing equipment on your boat.

Downloaded from www.Manualslib.com manuals search engine

Engine Gauges

Your boat might be equipped with a number of dash-mounted gauges that display the condition of various engine systems.

The gauges power up when the outboard engine ignition switch is turned to the ON position.

The engine gauges are illuminated for nighttime operation. The brightness of the gauge lights is controlled by the dimmer switch located on the helm station switch panel.

Review this general information about each gauge.

Refer to the engine operator's manual for detailed information about the gauges and their functions.

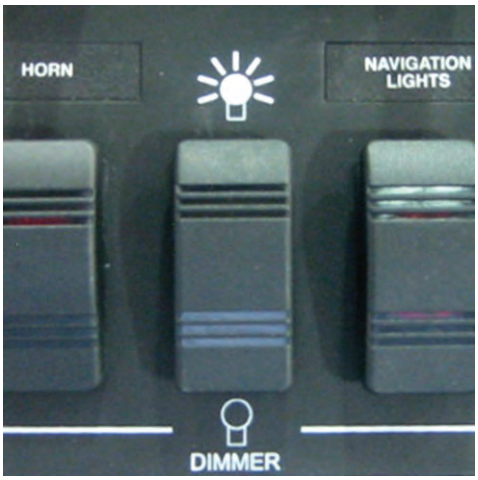

Tachometer

The tachometer displays engine speed in revolutions per minute (RPM). You can take the gauge reading on most tachometers and multiply by 1,000 to calculate engine speed. You can use engine RPM to influence fuel consumption, adjust boat performance, and evaluate propeller selection.

Some tachometers are driven by a signal from the engine's battery charging system. If your engine is running and the tachometer is reading zero, you might have a charging system problem.

⚠ CAUTION

Never allow the engine to exceed the maximum RPM listed in the engine operator's manual. Excessive RPM will cause extensive engine damage.

Downloaded from www.Manualslib.com manuals search engine

Hour Meter

The hour meter records cumulative hours of engine operation. The hour meter powers up when the engine ignition switch is turned to the ON position.

Always turn the engine ignition switch to the OFF position when the engine is secured from service. The hour meter will continue to count time when the engine is not running if the ignition switch is left in the ACC or ON position.

The engine operating hours can be used to schedule periodic maintenance for the boat and the engine.

Fuel Gauge

The fuel gauge powers up when the engine ignition switch is turned to the ON position. The fuel gauge displays the approximate fuel level in the fuel tank.

The correlation between the gauge reading and fuel load is approximately linear from **FULL** to **¼ FULL.** The accuracy of the reading decreases below **¼ FULL** because of the tank's profile.

The most accurate reading is obtained when the boat is at rest and level.

⚠ CAUTION

The fuel gauge reading is approximate. Verify the gauge reading using other methods. Be conservative when estimating fuel on-board.

Downloaded from www.Manualslib.com manuals search engine

Water Pressure Gauge

The water pressure gauge displays the pressure in the engine's cooling system. The gauge's unit of measure is pounds per square inch (PSI).

The water pressure gauge is a good indicator of cooling system condition. Notice the readings at various engine RPM and watch for any variation.

Refer to the engine operator's manual for PSI ranges for your engine.

⚠ CAUTION

If the water pressure reading drops significantly while the boat is on plane, stop the boat immediately. Check the engine's water intakes and cooling system. If the engine is overheating, continued operation could cause extensive damage.

Voltmeter

The outboard engine has an alternator that charges its starting battery when the engine is running above idle speed. The voltmeter displays engine battery voltage measured in DC volts (VDC).

These readings indicate that engine battery system is in good condition:

- Key OFF: 0 volts
- Key ON, engine not running: 12 volts
- Engine running above idle: 14½ volts

Refer to the engine operator's manual for additional detailed information about the engine's charging system.

Downloaded from www.Manualslib.com manuals search engine

Trim Gauge

The trim gauge measures the engine's angle position relative to the boat's transom. The first 15° of movement is the engine's **trim** range. The additional engine movement is referred to as the **tilt** range. Engine movement through the tilt range does not register on the trim gauge.

The trim gauge displays this value as relative **Bow Up** or **Bow Down**.

It takes specific experience with each boat/engine/propeller combination to identify the best engine trim settings for certain conditions. Remember that either extreme of the trim range is usually inefficient.

Generally, engine trim **IN** is good for acceleration and load carrying. Engine trim **OUT** is good for speed and fuel efficiency.

Refer to the engine operator's manual for detailed information about the engine trim system.

Downloaded from www.Manualslib.com manuals search engine

SmartCraft Vessel View® System

Your boat might be equipped with Mercury Marine's SmartCraft Vessel View boat and engine information system. The Vessel View color LCD display is mounted on the control console, directly above the steering wheel. The Vessel View system powers up when the engine main ignition key switch is turned to the ON position.

The Vessel View system is a comprehensive boat and engine information center that continuously monitors and reports detailed information about your boat, your engine, and your boating environment. Your Vessel View system is networked with the boat's GPS to provide detailed operational information such as navigation, speed over ground, and fuel to destination.

Your Vessel View system has a user-friendly interface that is controlled by seven buttons and a track pad. These controls allow you to calibrate and control all of the information reports and formats.

The Vessel View information reports are grouped into four categories.

- **Propulsion** includes all engine systems information
- **Vessel** includes information about fuel use, tank levels, generators, and air conditioning
- **Environmental** includes information about water depth, navigation, and GPS
- **Setup** includes screens related to calibration, display, and setup

The Vessel View system reports warnings using five levels of graphical icons. The icons change appearance as the warnings become more critical.

Refer to the SmartCraft Vessel View operation manual in your owner's bag for detailed information about the setup and operation of this important system.

Downloaded from www.Manualslib.com manuals search engine

Propellers

Your outboard engine is equipped with a propeller of a tested size and design to provide best engine and boat performance.

Refer to the engine operator's manual for detailed information about propeller designs and the correct propeller selection method.

⚠ CAUTION

Never use a propeller that allows the engine to operate outside of its recommended RPM range at full throttle. Extensive engine damage can occur.

You should always carry a spare propeller, propeller hardware, and propeller wrench on-board. Universal propeller wrench **P/N 1964627** is available from Boston Whaler. You should replace your propeller when it becomes damaged to avoid additional damage to the engine.

⚠ WARNING

To prevent the engine from starting accidentally, turn the engine battery OFF-ON switch to the OFF position before changing a propeller.

In some situations, you might want to change the propellers to give your boat slightly different performance characteristics. Changes to your boat's configuration, such as additional equipment or adding bottom paint, can affect the type and size of propeller required.

Downloaded from www.Manualslib.com manuals search engine

Reducing propeller pitch and diameter will increase acceleration and load carrying capability, with a slight decrease in top speed. It will also **increase** the engine's full-throttle RPM at a rate of about 150 RPM per inch of pitch change.

Increasing propeller pitch and diameter will decrease acceleration and might increase top speed. It will also **decrease** the engine's full-throttle RPM at a rate of about 150 RPM per inch of pitch change.

If you are considering a propeller change, the type, pitch, and diameter should be discussed with an authorized outboard engine service dealer.

Refer to the engine operator's manual for detailed information about changing your propeller.

Downloaded from www.Manualslib.com manuals search engine

Maneuvering

Maneuvering this boat requires experience and a high level of skill. Always operate any boat within the limits of your experience. If you do not have this experience, ask someone to instruct you or gain experience through experimentation under controlled conditions.

If you do not have this experience, do not operate this boat under high-risk conditions, such as:

- Heavy wind or current
- High-traffic areas
- Mission-related time limitations
- Confined or restricted areas
- Carrying hazardous cargo
- Compromised boat or engine systems

Always follow established boating regulations and directions from boating law authorities when maneuvering or underway. Always maneuver around objects, docks, and other boats at **idle speed**.

Always evaluate the wind strength, wind direction, current strength, and current direction as you maneuver. If possible, approach a dock or another boat moving into the wind or current.

Always keep your crew informed and prepared. Have mooring lines and fenders in place before you reach the dock.

Downloaded from www.Manualslib.com manuals search engine

Above idle speed in FORWARD, you can control boat direction with the steering wheel:

- Turn the steering wheel in a counter-clockwise direction to turn to **port**.
- Turn the steering wheel in a clockwise direction to turn to **starboard**.

You can use the engine throttle to greatly increase boat response while performing certain slow speed turning maneuvers. To turn quickly to port or starboard at slow speed, turn the steering wheel in the direction you want to go. **After** you have turned the steering wheel, increase the engine speed and the boat will turn quickly. It is important to turn the steering wheel **before** you increase engine speed, because the boat will accelerate in the direction it is steered.

Backing down, you can control boat direction with the steering wheel:

- Turn the steering wheel in a counter-clockwise direction to back down to **port**.
- Turn the steering wheel in a clockwise direction to back down to **starboard**.

Downloaded from www.Manualslib.com manuals search engine

Load Distribution

Placement and concentration of non-permanent loads in a boat can affect boat performance and crew safety. Refer to **Boat Load Capacities** in Section 1 of this manual for additional information.

⚠ WARNING

Improper operation, excessive loading, improper load distribution, and mismatching loads to existing conditions can contribute to boat swamping or capsizing. These situations can result in serious injury or death.

⚠ WARNING

The dive/rescue door is a specialized piece of rescue equipment. All posted USCG and NMMA load capacities are suspended when the dive/ rescue door is out. Operate your boat carefully to avoid swamping or capsizing.

Follow these guidelines for non-permanent loads:

- Never exceed the capacity limits listed in this manual.
- Consider reducing these capacity limits during emergencies, special operations, and severe weather.
- Never concentrate a heavy load in one small area.
- Equipment and people are considered part of your non-permanent load.
- Distribute any non-permanent load or cargo evenly, front-to-back and port-to-starboard.
- The center of the non-permanent load distribution should be in the center of the boat.
- Do not allow your non-permanent loads or cargo to shift unexpectedly. Always secure non-permanent loads and cargo with netting, tie-down straps, lines, and appropriate deck hardware.
- You must be prepared to adjust the load distribution as operating conditions change.

Downloaded from www.Manualslib.com manuals search engine

Boat Trim Tabs

Your boat is equipped with Lenco® electro-mechanical trim tabs. The trim tab control switches and LED indicator lights are located on the control console face.

Using the boat trim tabs properly requires experience and skill. Always operate any boat system within the limits of your experience. If you do not have this experience, ask someone to instruct you or gain experience through experimentation under controlled conditions.

⚠ WARNING

The boat's attitude and steering effort can react very quickly to changes in trim tab position. Adjust trim tab deployment in small increments to avoid loss of boat control.

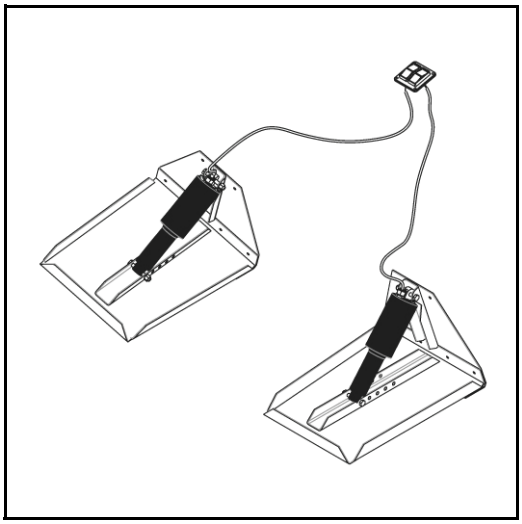

You can use the boat trim tabs to:

- Adjust for uneven load distribution
- Adjust for strong crosswinds
- Adjust for changing weather conditions
- Trim the boat fore and aft
- Trim the boat port and starboard
- Improve ride smoothness
- Improve boat performance

The electro-mechanical cylinders and trim tabs are located on the lower portion of the boat's transom.

The trim tab control box senses switched 12 VDC at the outboard engine main ignition key switch.

- The trim tab system will only operate when the outboard engine main ignition key switch is ON
- The trim tabs will automatically retract when the outboard engine main ignition key switch is turned OFF

Downloaded from www.Manualslib.com manuals search engine

Operation

The trim tab switch panel is labeled and wired to make tab operation simple. When operating the trim switches, think of how you want the **bow of the boat** to move to properly trim the boat.

To lower the **port** side of the bow, push the left switch forward. This lowers the trim plane on the **starboard** side of the transom.

To lower the **starboard** side of the bow, push the right switch forward. This lowers the trim plane on the **port** side of the transom.

To evenly lower or raise the bow of the boat, you can push both switches in the same direction at the same time. To evenly **lower** the bow, push both switches **forward**. To evenly **raise** the bow, push both switches **back**.

The Lenco switch panel includes two LED segment bars that represent the relative position of both trim tabs. When you **lower** one or both of the trim tabs, the LED segment bars will extend to indicate that the trim tabs are moving down. When you **raise** one or both of the trim tabs, the LED segment bars will retract to indicate that the trim tabs are moving up.

⚠ CAUTION

The trim tabs will automatically retract when the outboard engine main ignition key is turned OFF. Make sure that both trim tabs are fully retracted before you put the boat on a trailer, cradle, or boatlift. Contact with the trim tabs can cause serious damage to the tabs and boat.

Refer to the Lenco operator's manual for detailed information about system operation and maintenance.

Downloaded from www.Manualslib.com manuals search engine

Stopping Procedure

Use the following checklist at the end of each mission to verify that the appropriate boat systems are configured for a short period of non-use at the dock.

If you are not going to use the boat for a long period of time, refer to **Off-Season Storage** in Section 6.

- ❑ Put the control lever in NEUTRAL
- ❑ Secure the boat. Deploy fenders and fender boards
- ❑ Turn the main engine key switch to the OFF position
- ❑ Verify that the boat trim tabs are fully retracted
- ❑ Power down all electronic equipment following manufacturer's instructions
- ❑ Center the outboard engine before tilting to avoid contact with any special towing equipment
- ❑ Raise the engine to full Tilt Up position and engage tilt lock
- ❑ Turn engine battery OFF-ON switch to OFF position
- ❑ Turn house battery OFF-ON switch to OFF position
- ❑ Remove battery OFF-ON switch knobs if appropriate
- ❑ Bilge pump has an uninterruptible power supply to support automatic operation
- ❑ Verify bilge pump rocker switch is in the AUTO position
- ❑ Connect and activate shore power, if appropriate
- ❑ Verify shore power polarity

⚠ CAUTION

Keep the bilge pump switch in the AUTO position anytime the bilge drain plug is in place, whether the boat is in the water or on a trailer. Keeping the switch in the AUTO position allows the system to sense rainwater or melting snow that might accumulate in the bilge.

Downloaded from www.Manualslib.com manuals search engine

Trailering

If Boston Whaler supplied the trailer for your boat, it is designed specifically for your boat and it is commercial-grade. The trailer construction is heavy-duty and it exceeds the capacity requirements for your boat. This trailer might be equipped with additional upgrades to suit your mission.

Regulations controlling trailer equipment and manufacture vary from place to place. You must verify that your trailer meets the laws and transportation regulations in the states or countries where you use it.

Refer to the trailer owner's manual for detailed information about the operation and maintenance of this trailer.

⚠ CAUTION

Do not trailer your boat with the engine in its fully tilted position.

⚠ CAUTION

Center the engine before tilting to avoid contact with any special towing equipment on your boat.

Downloaded from www.Manualslib.com manuals search engine

If you supplied the trailer for your boat, you must verify that the trailer's design is adequate for your boat.

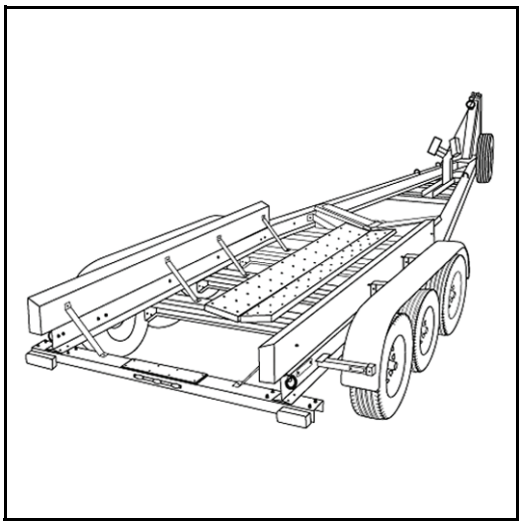

Review these guidelines when evaluating a customer-supplied trailer:

- The trailer's net carrying capacity must exceed the weight of the boat in its fully-loaded condition
- Construction materials must suit your operating environment
- The trailer should have torsion axles
- All trailer equipment (brakes, tires, winch, straps, etc.) should be heavy-duty
- Trailer bunks must be continuous and as long as the boat's running surface
- Trailer bunk contact angle must match the hull deadrise angle
- Trailer bunks must be parallel with the boat centerline and must not touch any lifting strake
- Trailer should be equipped with a barge stop to support the boat's bow
- Trailer bunks must not be segmented or swivel
- Trailer must not be an "all-roller" design
- Trailer must not support boat weight at any single, concentrated point such as a keel roller

Refer to **Trailer Setup** in Section 6 for detailed information about trailer dimensions.

⚠ CAUTION

Transporting your boat on a sub-standard trailer can cause serious, permanent damage to the hull. This type of hull damage is considered "improper storage" and is not covered under the BCGP limited commercial warranty.

Downloaded from www.Manualslib.com manuals search engine

Safety Checklist

Use the following safety checklist to verify that your boat, trailer, and towing vehicle are in good condition. Use this checklist each time you prepare for a mission. Resolve any issues before beginning your mission.

- ❑ Trailer maintenance log is current
- ❑ Tow vehicle **gross combined weight rating** (GCWR) must exceed combined weights of your tow vehicle, boat, and trailer
- ❑ Tow vehicle is in good condition
- ❑ All gear and equipment in boat is secured
- ❑ Boat engine supported by trailering lock
- ❑ Boat correctly positioned on trailer bunks
- ❑ Winch cable tight and locked
- ❑ Bow safety cable attached
- ❑ Bow tie-down link secured
- ❑ Stern tie-down straps secured
- ❑ Trailer surge or electric brakes operational
- ❑ Trailer tires and spare in good condition
- ❑ Tire pressures are correct
- ❑ Lug nuts are correctly tightened
- ❑ Wheel bearings lubricated and functional
- ❑ Trailer pintle or coupler securely attached to tow vehicle
- ❑ Trailer safety cables attached to tow vehicle using criss-cross pattern
- ❑ Trailer brake emergency actuator chain attached to tow vehicle
- ❑ Trailer light connector plugged in to tow vehicle
- ❑ Trailer clearance, brake, and turn signal lights operational
- ❑ Trailer jack completely retracted and caster wheel removed if possible

Refer to the trailer owner's manual for detailed information about maintenance procedures and service specifications.

Downloaded from www.Manualslib.com manuals search engine

Towing

⚠ WARNING

Tow vehicle GCWR must exceed the combined weights of your tow vehicle, boat, and trailer. Overloading the tow vehicle is unsafe and could cause loss of vehicle control.

Towing your boat on a trailer requires experience and skill. Always operate a towing vehicle within the limits of your experience. If you do not have this experience, ask someone to instruct you or gain experience through experimentation under controlled conditions.

When maneuvering on streets or highways, always remember that the boat and trailer have at least doubled the effective length and weight of your tow vehicle. Follow these guidelines when towing:

- Always use common sense when trailering a boat
- Operate your tow vehicle well within the existing traffic regulations
- Pay close attention to road and weather conditions
- Always avoid traffic situations where rapid acceleration or deceleration is required
- Double the standard following distance for your vehicle speed
- Always be aware of traffic conditions around you
- Identify any possible “blind spots” behind or on either side of your trailer
- Plan ahead and check your mirrors carefully when changing lanes, stopping, or turning
- Always signal your intentions well in advance of a lane change or a turn
- Make very wide turns. Your trailer will not follow the path of your tow vehicle tires
- Stop periodically to check the condition of the trailer, boat, and tow vehicle

Downloaded from www.Manualslib.com manuals search engine

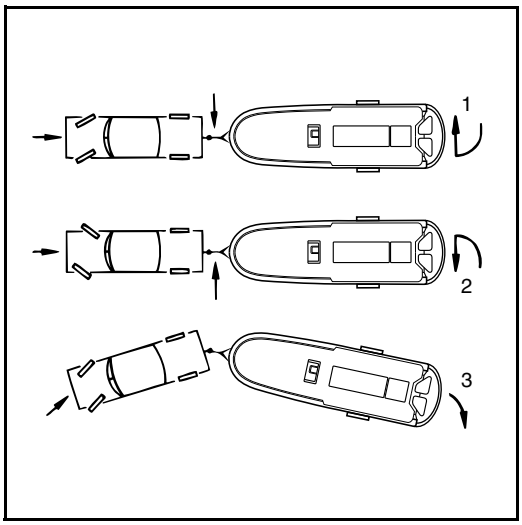

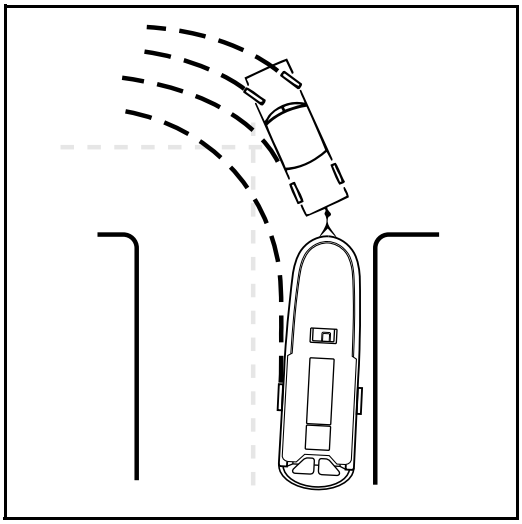

Backing

Backing a trailer requires experience and skill. Always operate a towing vehicle within the limits of your experience. If you do not have this experience, ask someone to instruct you or gain experience through experimentation under controlled conditions.

Follow these guidelines when backing your trailer:

- Have a spotter outside the vehicle to assist with instructions
- Check your mirrors constantly
- Always know where the boat is in relation to any fixed objects
- Never accelerate in reverse. Back up slowly!
- When the trailer is straight behind the tow vehicle, the rear of the trailer will move opposite the direction that you turn the steering wheel
- If you turn the steering wheel clockwise, the trailer will move to the left
- If you move the steering wheel counter-clockwise, the trailer will move to the right
- Half way through the turn, adjust the steering wheel to follow the trailer through its turn
- Do not allow the trailer to turn so sharply that the trailer or boat hits the tow vehicle

Downloaded from www.Manualslib.com manuals search engine

Lifting and Slinging

Safety Warnings

⚠ WARNING

Verify that the lifting equipment, spreader bars, slings, and attaching hardware are professionally certified to a working load of at least 4300 pounds (1950 kg) with a safety factor of five. Failure of any lifting component could cause extensive damage to the boat, serious injury, or death.

⚠ DANGER

Never allow anyone to be in the boat or under the boat while you are lifting it. A mistake in the lifting procedure or a component failure could cause serious injury or death.

⚠ DANGER

Inspect all lifting equipment for signs of wear or fatigue each time you lift the boat. Re-certify or replace the lifting equipment annually. Failure of any lifting component could cause serious injury or death.

⚠ WARNING

Never use the boat's bow eye, stern eyes, cleats, or railings as attachment points to lift this boat. Failure of these items during lifting could cause extensive damage to the boat, serious injury, or death.

⚠ CAUTION

Before you lift your boat, inspect the bottom to determine if there are any thru-hull transducers installed. Contact between lifting gear and a transducer will cause immediate, extensive damage to the transducer and the hull.

Downloaded from www.Manualslib.com manuals search engine

Gunwale Lifting Eyes

Your boat might be equipped with gunwale lifting eyes. **These gunwale lifting eyes are only available as a factory-installed option**. Your hull would have a special lamination schedule and aluminum plate inserts to distribute the lifting load. If your boat has gunwale lifting eyes that were installed by the factory, you may use them as attaching points to lift your boat.

If you use the gunwale lifting eyes to move the boat, attach a four-point harness that is professionally certified to a working load of at least 4300 pounds (1950 kg) with a safety factor of five. Your boat might have been shipped with a Boston Whaler lifting sling set that meets all manufacturer requirements for lifting this boat.

To provide a 5° bow-up angle during lifting, the front two straps are slightly longer than the rear two straps. The front two straps are marked **FORWARD** and rear two straps are marked **REAR**.

Attach at least two guide lines to control the boat while it is being lifted.

⚠ DANGER

Never allow anyone to be in the boat or under the boat while you are lifting it. A mistake in the lifting procedure or a component failure could cause serious injury or death.

⚠ CAUTION

Lift sling angles must always be greater than 60° from the deck, measured in any direction. Lift sling angles less than 60° will multiply the lifting forces and will damage the integral lifting eyes and the boat.

Downloaded from www.Manualslib.com manuals search engine

Safety Warnings

⚠ WARNING

Inspect your fuel system and fuel tank before each mission. Correct the cause of any gasoline leak immediately. Ventilate the area to eliminate gasoline vapor before energizing any 12 VDC electrical circuits or starting the outboard engine.

⚠ DANGER

Leaking gasoline is a fire and explosion hazard. Gasoline vapor is extremely flammable and highly explosive under certain conditions. Correct the cause of any gasoline leak immediately.

⚠ WARNING

This fuel system is not designed to support an automatic "hands free" fuel nozzle. Never use an automatic fuel nozzle to fill this tank and never leave a fueling process unattended.

⚠ WARNING

The components in your boat fuel system are designed to work with automotive gasoline containing up to 10% ethanol, by volume. Using automotive gasoline with higher concentrations of ethanol will damage boat fuel system components and might cause fuel leaks.

⚠ CAUTION

Gasoline and oil spills are a safety hazard and can contaminate the marine environment. Never allow gasoline or oil to be discharged into the water.

Downloaded from www.Manualslib.com manuals search engine

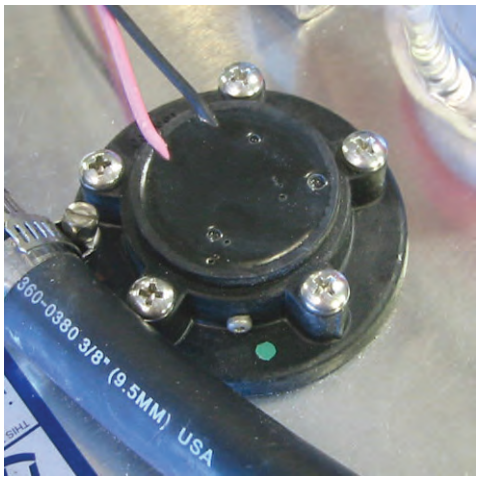

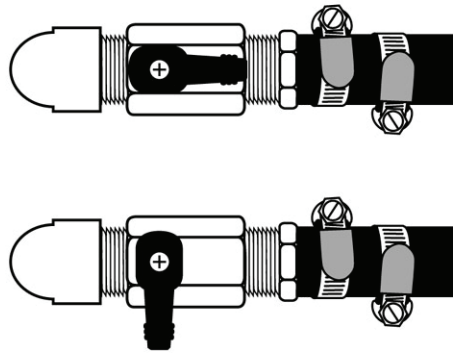

General Description

Read and understand all the fuel-related information and warnings in this section and in your outboard engine operator's manual.

Your boat is equipped with a built-in gasoline fuel system. The fuel system includes a single, centerline fuel tank. The fuel tank is manufactured from marine-grade 5052-H32 aluminum alloy and it is installed in the mid-bilge area. The fuel tank has a manufacturer's compliance label next to the fuel level sending unit. The compliance label includes information about tank capacity, construction materials, and date of manufacture.

Your fuel system is designed to meet the diurnal emissions requirements outlined in ABYC Standard H24.18.4.1 and in Code of Federal Regulations (CFR) Title 40, sub-parts 1045 and 1060. These design elements work to limit liquid and vapor hydrocarbon emissions from your on-board gasoline fuel system.

The fuel tank working capacity is 54 gallons (204 liters).

The fuel tank has an electric sending unit that sends fuel level readings to the fuel gauge at the helm station.

The fuel tank has one fuel withdrawal tube for the outboard engine and one fuel withdrawal tube for auxiliary equipment such as a fire pump. Each fuel withdrawal tube has a manual fuel shutoff valve. You can use these valves to stop fuel flow during storage, during fuel system servicing, or in the event of an on-board fire.

The fuel valve is in the **ON** position when the lever is parallel with the valve body and the fuel valve is in the **OFF** position when the lever is perpendicular to the valve body.

The **Fuel System Diagram** in this section shows locations of the fuel tank, fuel fill, fuel tank vent, fuel level sending unit, fuel withdrawal tubes, fuel shutoff valves, fuel filters, and certain emission system components.

Downloaded from www.Manualslib.com manuals search engine

The fuel tank fill cap is located in the engine splash-well. The fill cap is labeled GAS. The fuel fill cap and fill hose are equipped with a flow-control valve that will not allow liquid gasoline to escape from the fill cap during normal fueling operations.

⚠ WARNING

Do not allow any liquid gasoline to enter the boat or accumulate in the bilge. Liquid gasoline is a fire and explosion hazard. Gasoline vapor is extremely flammable and highly explosive under certain conditions.

⚠ CAUTION

Read and understand all fuel-related information and warnings in your outboard engine operator's manual.

The fuel tank is included in the boat's bonding system. All exposed metallic components that are served by the 12 VDC electrical system, but do not carry current, are electrically connected to an internal bonding system. Design benefits of the bonding system include:

- Provide a low resistance electrical connection among isolated metal components, which might be subject to electrolytic corrosion caused by stray voltage
- Prevent the build-up of electrical potential on exposed metal parts, which might cause personal injury
- Provide a low resistance electrical connection to ground when components are exposed to voltage spikes such as a lightning strike
- Reduce radio frequency interference (RFI)

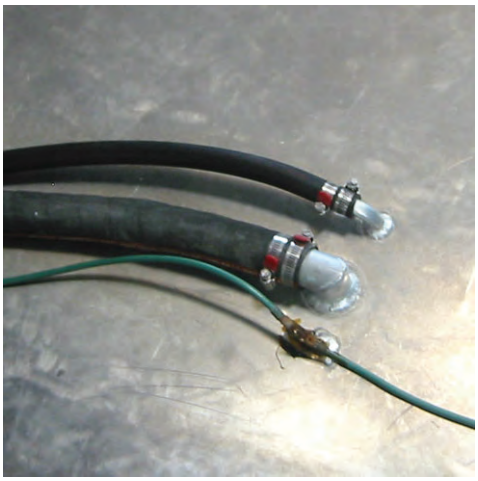

The common bonding conductor, a green #8 awg insulated copper wire, connects the fuel fill assembly and the fuel tank to a grounding plate located on the hull.

Downloaded from www.Manualslib.com manuals search engine

Fuel System Diagram

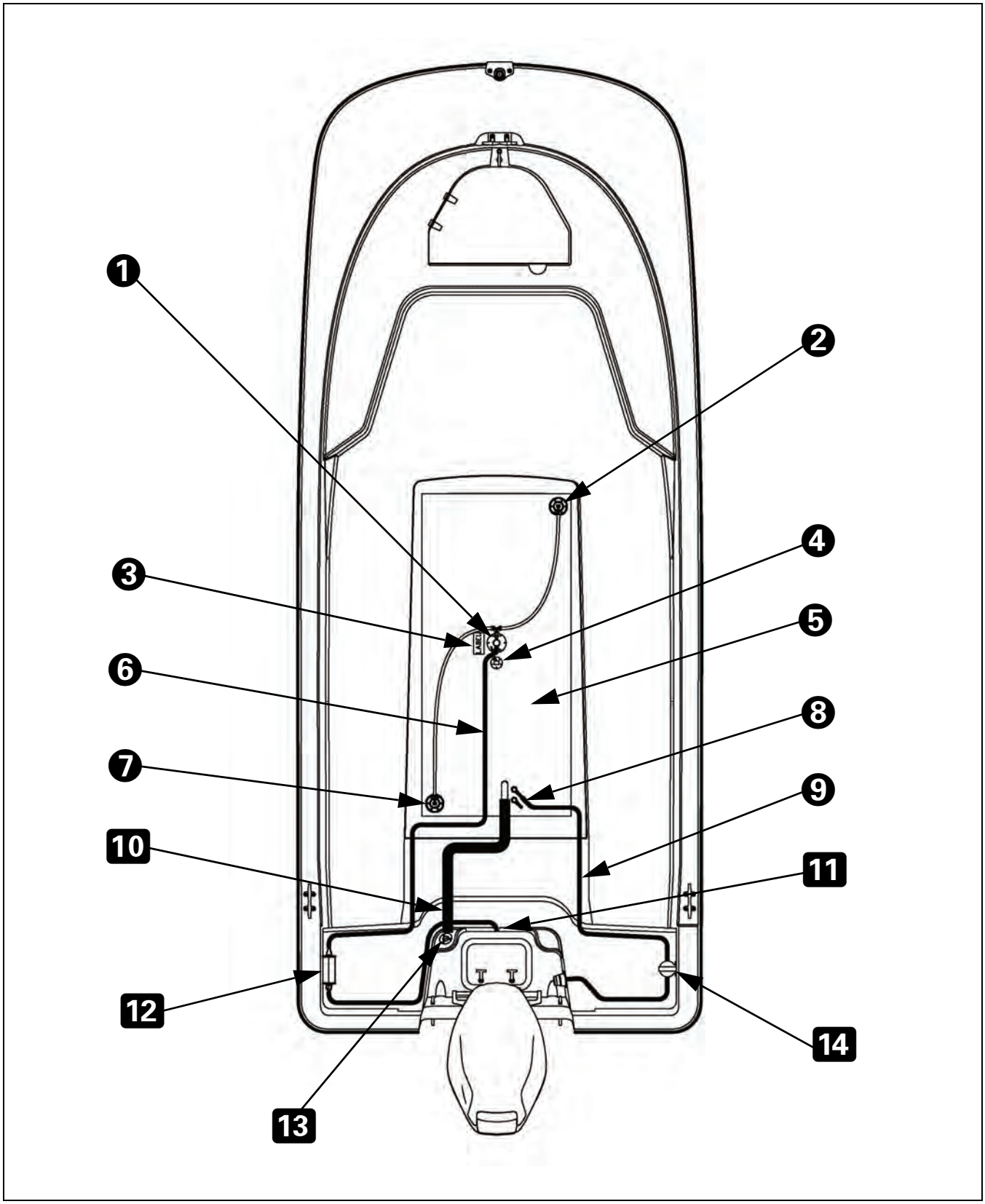

Downloaded from www.Manualslib.com manuals search engine

1. Valve, fluid level vent
2. Valve, grade level vent
3. Label, manufacturer compliance
4. Sender, fuel level
5. Tank, gasoline, 54 gallons (204 liters)
6. Hose, fuel vent
7. Valve, grade level vent
8. Valve, fuel shutoff (2)
9. Hose, fuel distribution, USCG A1
10. Valve, flow control
11. Vent, fuel tank
12. Canister, carbon, vent
13. Cap, fuel fill
14. Filter, gasoline, Racor® (optional)

Downloaded from www.Manualslib.com manuals search engine

Operator Notes

Downloaded from www.Manualslib.com manuals search engine

Racor® Gasoline Filter

Your boat might be equipped with one Racor® 320R-RAC-01 gasoline fuel filter. This filter features a water-separating 10-micron filter element, a replaceable spin-on canister, and a clear bowl to help detect water in your fuel.

Your inspection and servicing routine is directly related to the quality and quantity of gasoline that you take on-board. You should check the sight bowl for evidence of moisture before and after every mission.

Refer to **Blended Fuels** in this section for more information about water in gasoline.

Replace the filter element on this schedule, whichever happens first:

- Every 100 operating hours
- Annually
- Noticeable engine performance loss

⚠ WARNING

Follow the manufacturer's recommendations exactly when servicing this gasoline filter to avoid engine damage or fuel leaks. Refer to the manufacturer's instruction booklet in your owner's bag for detailed information about these service procedures.

⚠ WARNING

Do not allow any liquid gasoline to enter the boat or accumulate in the bilge. Liquid gasoline is a fire and explosion hazard. Gasoline vapor is extremely flammable and highly explosive under certain conditions.

Downloaded from www.Manualslib.com manuals search engine

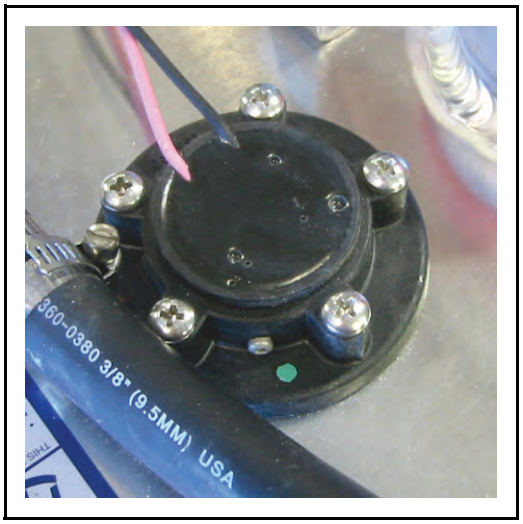

Fuel Gauge and Sending Unit

The fuel tank has a sending unit that sends fuel level information to the electric fuel level gauge installed on the control console. The fuel level sender is an **ISSPRO** unit. The sending unit is fully electronic and compatible with Mercury Marine's SmartCraft gauge system. The sending unit generates a fuel level signal between 240 ohms (empty) and 33 ohms (full).

The fuel gauge powers up when the engine ignition key switch is turned to the ON position. The fuel gauge displays the approximate fuel level in the fuel tank. The correlation between the gauge reading and the fuel load is approximately linear from **FULL** to **¼ FULL**. The accuracy of the reading decreases below **¼ FULL** because of the tank's profile.

The most accurate fuel level reading is obtained when the boat is at rest and level.

⚠ CAUTION

The fuel gauge reading is approximate. Confirm the gauge reading using other methods. Be conservative when estimating fuel on-board.

Downloaded from www.Manualslib.com manuals search engine

Fill and Vent Locations

The **Fuel System Diagram** in this section shows locations of the fuel tank, fuel fill, fuel tank vent, fuel level sending unit, fuel withdrawal tubes, fuel shutoff valves, fuel filter, and certain emission system components.

The fuel tank fill cap is located in the engine splashwell. The fill cap is labeled **GAS**. The fuel fill cap and fill hose are equipped with a flow-control valve that will not allow liquid gasoline to escape from the fill cap during normal fueling operations.

The fuel tank vent is also in the engine splashwell. The fuel tank venting system is equipped grade level valves that keep liquid fuel from entering the vent hose. The fuel tank venting system is also equipped with a carbon canister which reduces vapor hydrocarbon emissions.

⚠ WARNING

Do not allow any liquid gasoline to enter the boat or accumulate in the bilge. Liquid gasoline is a fire and explosion hazard. Gasoline vapor is extremely flammable and highly explosive under certain conditions.

Refer to **Fueling Procedures** in this section for detailed information about fueling operations.

Downloaded from www.Manualslib.com manuals search engine

Bonding System

A green #8 awg insulated copper wire forms a common bond among the fuel tank, the fuel fill assembly, and the bonding plate on the hull.

Maintenance

Check the bonding system periodically to assure that the wire and connections are not broken or damaged. You can verify the integrity of the system by checking for continuity with an ohmmeter or continuity light between the grounding plate and the fuel fill assembly. If the meter or light indicates a break in continuity, replace the bonding system wires. After testing, coat all screws and terminals with liquid neoprene.

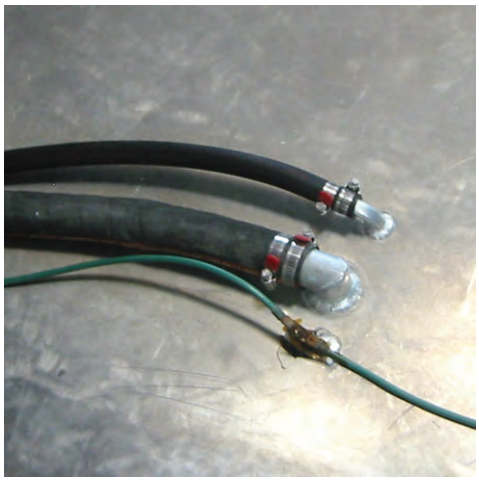

Repair

The following procedure covers the removal and installation of the bonding system wires. Bonding wires are accessed through the deck access plates and access hatches.

Perform a continuity test as described in **Bonding System Maintenance**. Remove the screw at each terminal location of the faulty wire. Attach a new wire to the end of the faulty wire and use the faulty wire to pull the new wire into position. Secure the wire to the terminal with a screw. Coat the terminal and screw with liquid neoprene.

Downloaded from www.Manualslib.com manuals search engine

Fueling Procedures

Safety Warnings

⚠ DANGER

Gasoline vapor is extremely flammable and highly explosive under certain conditions. Always stop the engine and never smoke or allow open flames or sparks within 50 feet (15 meters) of the fueling area when refueling.

⚠ DANGER

A discharge of static electricity can ignite gasoline vapor, causing serious injury, death, and destruction of property.

⚠ WARNING

This fuel system is not designed to support an automatic “hands free” fuel nozzle. Never use an automatic fuel nozzle to fill this tank and never leave a fueling process unattended.

⚠ WARNING

The components in your boat fuel system are designed to work with automotive gasoline containing up to 10% ethanol, by volume. Using automotive gasoline with higher concentrations of ethanol will damage boat fuel system components and might cause fuel leaks.

⚠ CAUTION

Gasoline and oil spills are a safety hazard and can contaminate the marine environment. Never allow gasoline or oil to be discharged into the water.

Downloaded from www.Manualslib.com manuals search engine

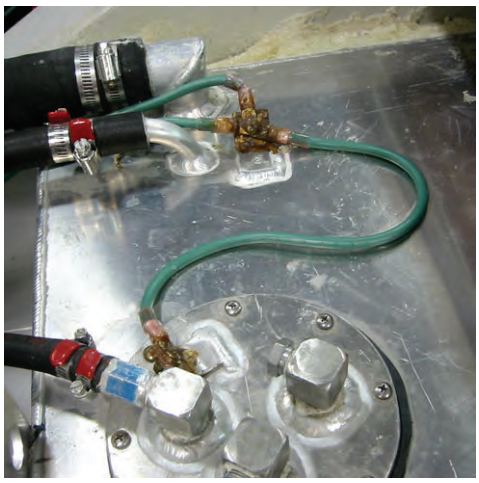

Static Electricity

A discharge of static electricity can ignite gasoline vapor that has accumulated during the fueling process. Use extreme caution when fueling your boat under unusual circumstances such as when the boat is suspended in a boatlift.

Your boat has important safety features and systems that can be defeated by not following standard fueling practices. Under normal conditions, your boat's bonding system protects it from accumulating and discharging static electricity.

Here are some important guidelines to protect you from static electricity discharge while fueling:

- Always keep your boat in continuous contact with the water or a land-based grounding system during fueling.
- Always keep the fuel nozzle in contact with the fuel fill assembly or the edge of the fuel tank opening during the fueling process. This contact must be continuously maintained until fuel flow has stopped.
- Never fuel your boat under unsafe conditions that could increase the possibility of creating static electricity.
- Only fill portable fuel tanks while on land, never on-board the boat.
- Never use homemade containers as a source of gasoline to fill your tank.
- Only carry gasoline on-board in a UL-approved container or in a portable fuel tank such as those provided with outboard engines.
- Never store portable fuel tanks in living, engine, or mechanical spaces.

Downloaded from www.Manualslib.com manuals search engine

General Guidelines

Also follow these important guidelines during fueling operations:

⚠ WARNING

This fuel system is not designed to support an automatic "hands free" fuel nozzle. Never use an automatic fuel nozzle to fill this tank and never leave a fueling process unattended.

- Shut down the outboard engine, all electric motors, and fans before fueling. All possible sources of ignition must be OFF before you begin taking on gasoline.
- Close all ports, windows, doors, hatches, and compartments.
- Extinguish cigarettes, pipes, stoves, and all other flame-producing devices.
- Make sure all power is OFF. Do not operate any electrical switches.
- Never take on gasoline at night, except in well-lighted areas.
- Insert fuel nozzle and make sure nozzle is in contact with or grounded against fill pipe before you pump gasoline. This contact must be continuously maintained until gasoline flow has stopped.
- Never exceed a fill rate of 9 GPM (34 lpm). Slow the fill rate to 6 GPM (23 lpm) for the final ¼ of tank.
- **DO NOT fill the tank completely.** Allow a minimum of 2% of tank volume for temperature-related expansion. Allow for 6% expansion if the temperature of the gasoline taken on-board is 32°F (0°C) or lower.
- Close and secure the fuel fill cap after fueling.
- Wipe up any spillage completely and dispose of rags or waste on-shore following all state and federal regulations.
- Ventilate the general area to eliminate any signs of gasoline vapor.

Downloaded from www.Manualslib.com manuals search engine

Hose Routing

The **Fuel System Diagram** in this section shows locations of the fuel tank, fuel fill, fuel tank vent, fuel level sending unit, fuel withdrawal tubes, fuel shutoff valves, fuel filter, and certain emission system components.

Fill Hose Replacement

Removal

Loosen the two hose clamps and remove the hose from the elbow at the fuel tank. Remove the clamps from the hose.

Loosen the two hose clamps and remove the hose from the fuel fill plate assembly. Remove the clamps from the hose. Pull the hose from under the deck plate slowly until it is completely free.

Installation

If your fuel system is equipped with a flow-control valve, transfer the valve to the new fill hose. Match the original orientation of the valve exactly during installation. Route the new static-conductive fill hose under the fuel fill plate assembly until it reaches the elbow on the fuel tank. Secure the hose to the tank elbow with two hose clamps.

Attach the other end of the hose to the fuel fill plate assembly and secure with two hose clamps.

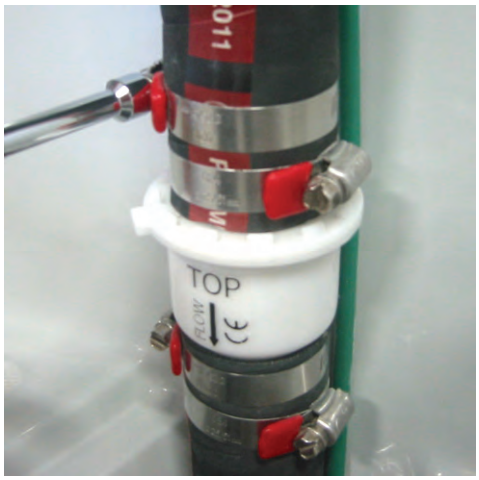

⚠ WARNING

Do not allow any liquid gasoline to enter the boat or accumulate in the bilge. Liquid gasoline is a fire and explosion hazard. Gasoline vapor is extremely flammable and highly explosive under certain conditions.

Downloaded from www.Manualslib.com manuals search engine

Vent Hose Replacement

Removal

Your fuel tank is vented at the engine splashwell.

Loosen the two hose clamps and remove the hose from the elbow at the fuel tank. Remove the clamps from the hose.

Loosen the two hose clamps and remove the hose from the vent fitting. Remove the clamps from the hose. Pull the hose from under the deck plate slowly until it is completely free.

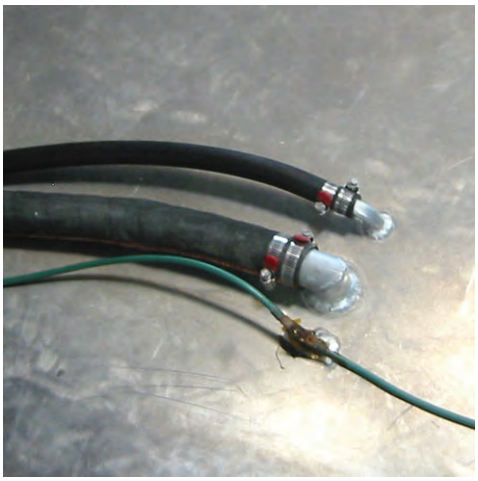

Installation

If your fuel system is equipped with a carbon canister, transfer the canister to the new vent hose. Match the original orientation of the canister exactly during installation. Route the vent hose under the deck until it reaches the elbow on the fuel tank. Secure the hose to the tank elbow with two hose clamps.

Attach the other end of the hose to the vent fitting at the engine splashwell and secure with two hose clamps.

⚠ WARNING

Do not allow any liquid gasoline to enter the boat or accumulate in the bilge. Liquid gasoline is a fire and explosion hazard. Gasoline vapor is extremely flammable and highly explosive under certain conditions.

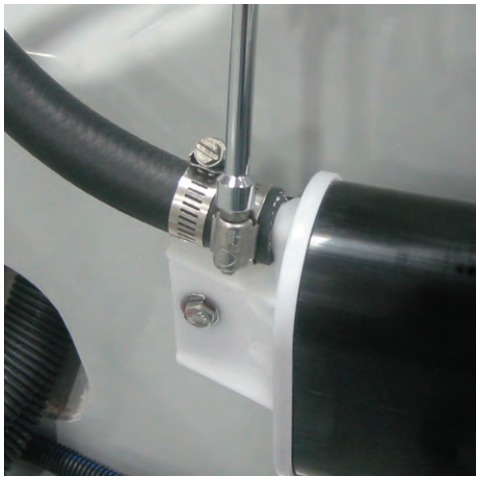

Downloaded from www.Manualslib.com manuals search engine

Contaminated Gasoline

Water from condensation and sediment from contaminated gasoline can collect in your fuel tank. Contaminated gasoline can damage boat fuel system components, corrode the fuel tank, clog the fuel filter, and damage your engine's fuel system.

Your fuel filter inspection and servicing routine is directly related to the quality and quantity of gasoline that you take on-board. You should check the fuel filter sight bowl for evidence of moisture before and after every mission.

Refer to **Blended Fuels** in this section for more information about water in gasoline.

If your fuel shows evidence of moisture or particulate contamination, consult a professional tank-cleaning contractor about having your fuel tank pumped out and cleaned.

Verify that the contractor is fully licensed and that he can dispose of the contaminated gasoline following all state and federal regulations.

⚠ WARNING

Do not allow any liquid gasoline to enter the boat or accumulate in the bilge. Liquid gasoline is a fire and explosion hazard. Gasoline vapor is extremely flammable and highly explosive under certain conditions.

Downloaded from www.Manualslib.com manuals search engine

Blended Fuels

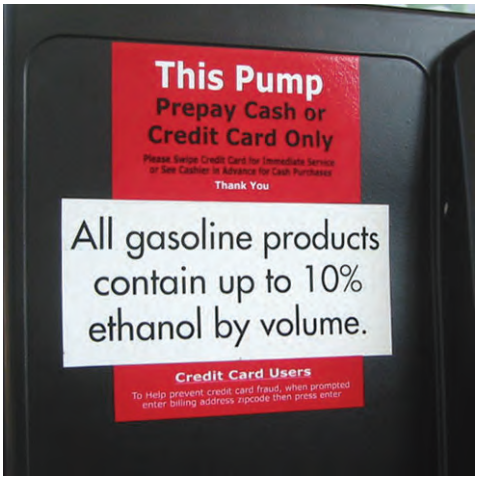

⚠ WARNING

The components in your boat fuel system are designed to work with automotive gasoline containing up to 10% ethanol, by volume. Using automotive gasoline with higher concentrations of ethanol will damage boat fuel system components and might cause fuel leaks.

Automotive gasoline has contained various oxygenated hydrocarbon compounds as replacements for lead since 1985. These compounds boost the octane rating of gasoline. Two familiar compounds are MTBE and ethanol. Ethanol is now the most common compound since MTBE was identified as a serious polluter of ground water.

Ethanol for gasoline is a highly refined grain alcohol rated at about 200 proof. The U.S. EPA currently allows automotive gasoline to contain up to 10% ethanol, by volume. While E-10 gasoline does not cause significant problems in road vehicles, it does require extra attention when used in your boat. **Follow these rules when using E-10 gasoline in your boat:**

- Read and understand all of the fuel-related safety warnings and maintenance procedures outlined in this operator manual.
- Read and understand all of the fuel-related safety warnings and maintenance procedures outlined in your outboard engine operator's manual.
- Ethanol is hygroscopic, meaning that it attracts and easily mixes with moisture. E-10 gasoline will corrode metal fuel system parts faster than gasoline without ethanol. If you are switching to E-10 gasoline, it can loosen scale and deposits in older fuel systems. Regularly inspect all fuel system components and fuel filters for signs of corrosion and particulate contamination.

Downloaded from www.Manualslib.com manuals search engine

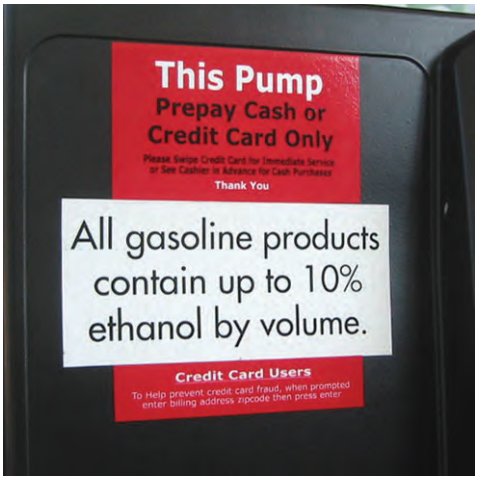

- If E-10 gasoline absorbs enough moisture, it can suffer phase separation. The ethanol and water mixture will fall out of suspension and collect in the lowest parts of the fuel system. The ethanol and water mixture can damage engines, clog fuel filters, and corrode metal fuel system parts. Fuel tanks with E-10 gasoline should always be kept as full as possible to reduce exposure to moisture from condensation and humidity.
- Concentrations of ethanol greater than 10% can change the physical properties of some rubber and plastic fuel system parts such as gaskets, hoses, tanks, and filters. Regularly inspect all non-metal fuel system parts for signs of swelling or deterioration. In some extreme cases, rubber parts such as hoses and gaskets can actually sweat liquid gasoline. Be alert for the odor of gasoline or small droplets of gasoline near these parts.
- Always have fuel system repairs performed by a qualified marine technician.

Downloaded from www.Manualslib.com manuals search engine

General Description

This section contains general theory and functional information about the boat systems. This information is intended to give you an idea about how each boat system is configured and how it should be used.

The content of this section is based on the most current design and assembly information available at the time of publication. The information and illustrations are general representations of the boat systems, the information is not meant to be used as a detailed parts manual or a service manual.

Certain features, parts, systems, and accessories discussed in this section might not be found on your boat.

This boat and these boat systems should be maintained by an experienced marine technician.

Specific troubleshooting and parts information for each accessory component might be included in the OEM literature contained in your owner's bag.

Downloaded from www.Manualslib.com manuals search engine

Console Layout

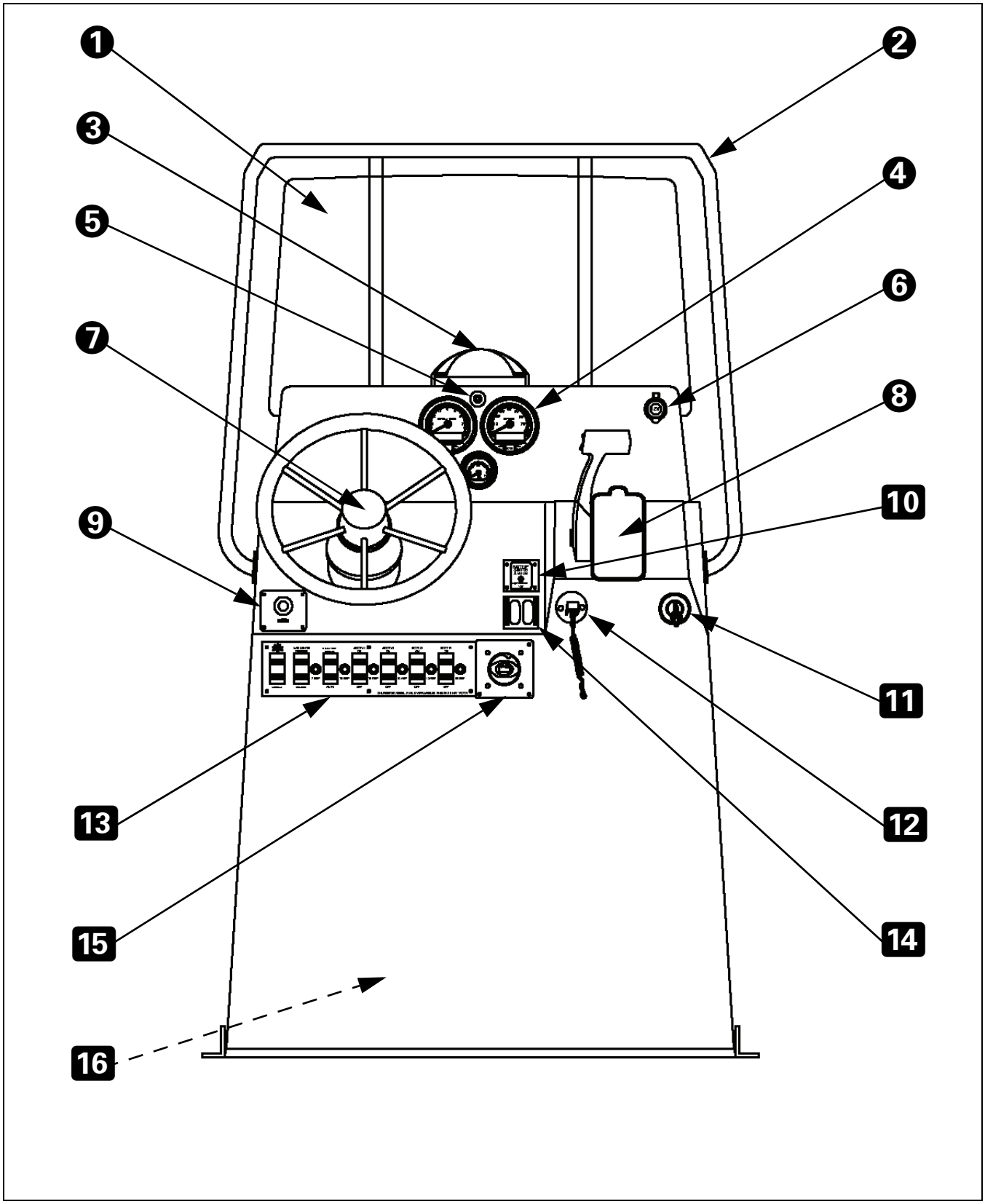

Downloaded from www.Manualslib.com manuals search engine

1. Windshield, acrylic
2. Rail, hand, safety
3. Compass, magnetic
4. Engine instrumentation
5. Sensor, ambient temperature, Verado
6. Outlet, accessory, 12 VDC
7. Helm, steering, hydraulic
8. Control, engine, single-lever
9. Button, horn, 12 VDC
10. Panel, LED, battery status
11. Switch, engine, ignition
12. Switch, engine, emergency shutoff
13. Panel, switch, helm station
14. Panel, switch, Lenco tabs
15. Switch, battery, engine
16. Storage, batteries, engine & house

Downloaded from www.Manualslib.com manuals search engine

Deck Layout

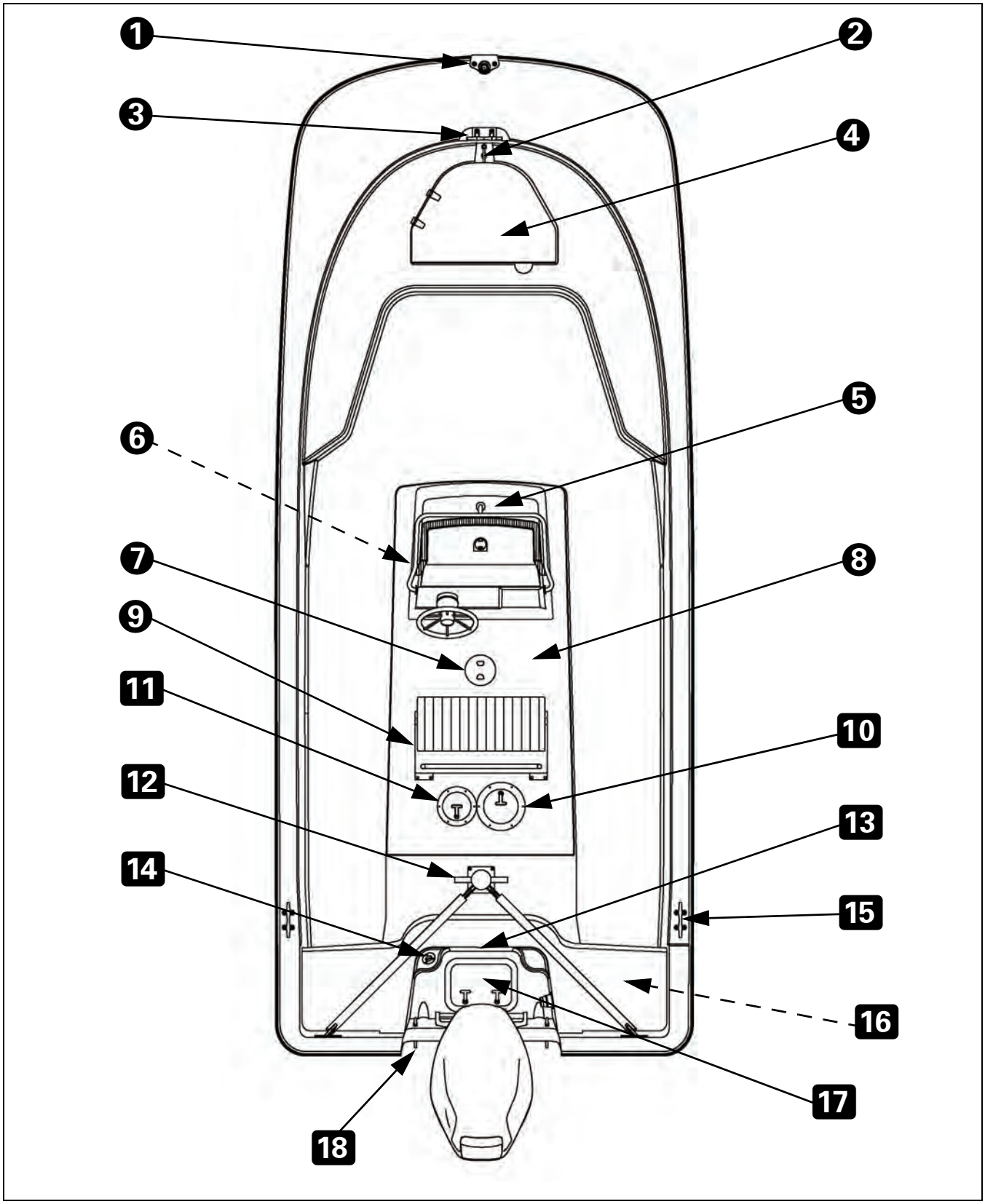

Downloaded from www.Manualslib.com manuals search engine

1. Bow chock assembly
2. Belaying eye, anchor rode
3. Cleat, bow
4. Locker, bow storage
5. Console, control
6. Storage, batteries, engine & house
7. Plate, access, fuel level sender
8. Cover, fuel tank
9. Leaning post
10. Plate, access, fuel shutoff valves
11. Plate, access, grade level valve
12. Tow post (optional)
13. Vent, fuel tank
14. Cap, fuel fill
15. Cleat, stern, two places
16. Filter, gasoline, Racor® (optional)
17. Hatch, access, aft bilge
18. Stern eyes, two places

Downloaded from www.Manualslib.com manuals search engine

Steering System

The steering system installed in your boat is a Teleflex Sea Star II hydraulic system. This is a manually operated, closed-loop hydraulic system requiring no electrical pumps or motors. The system consists of the following components:

- Steering wheel
- Sea Star II helm pump
- Teleflex hydraulic hoses
- Front-mount steering cylinder
- Aero Shell® #41 fluid

The Sea Star II helm pump is an axial piston pump specifically designed for manual steering. It has a built-in lock valve to prevent the steering load of the engine from feeding back to the boat operator. The lock valve will not allow the engine to move unless the steering wheel is turned. The lock valve also contains a pressure relief valve which provides over-pressure protection for the mechanical components, the hydraulic hoses, and the fittings.

When the steering wheel is turned **clockwise**, hydraulic fluid is pumped out of the helm unit, into the starboard hydraulic line and then into the steering cylinder. As the fluid is pumped into one side of the steering cylinder, an equal volume of fluid is displaced from the opposite side. The steering cylinder moves to port. The steering cylinder is connected directly to the engine's steering arm. The engine's steering arm also moves to port and puts the boat into a starboard turn. The fluid displaced from the steering cylinder returns to the helm pump reservoir.

Turning the steering wheel **counter-clockwise** results in a similar response, but in the opposite direction. When no course correction is required, the lock valve holds the outboard engine in place.

Downloaded from www.Manualslib.com manuals search engine

Hydraulic fluid is added to the system through a fill port in the helm pump while air is purged through bleeder tees on the steering cylinder. The hydraulic steering system has been filled, purged, and checked for leaks prior to shipment. It is important to check the system for proper engine turning control before putting the boat into service.

Refer to the Teleflex owner's manual for detailed system component descriptions and maintenance instructions.

Operation

To properly steer and control the movement of the boat, the operator should practice and become familiar with the following procedures.

Going Ahead

The bow turns to starboard when the steering wheel is turned **clockwise**.

The bow turns to port when the steering wheel is turned **counter-clockwise**.

The number of revolutions of the steering wheel and the speed of the boat determine the rate of directional change.

You can use the engine throttle to greatly increase boat response while performing certain slow speed turning maneuvers. To turn quickly to port or starboard at slow speed, turn the steering wheel in the direction you want to go. **After** you have turned the steering wheel, increase the engine speed and the boat will turn quickly. It is important to turn the steering wheel **before** you increase engine speed because the boat will accelerate in the direction it is steered.

Return the steering wheel to the **CENTERED** position when you turn the engine **OFF**.

Downloaded from www.Manualslib.com manuals search engine

Going Astern

The steering system has less effect while backing up the boat.

The stern moves to starboard when the steering wheel is turned **clockwise**.

The stern moves to port when the steering wheel is turned **counter-clockwise**.

The stern can be made to run straight in reverse by determining the proper rudder angle. Experiment with engine speed and rudder angle to determine this position.

Return the steering wheel to the **CENTERED** position when you turn the engine **OFF**.

Downloaded from www.Manualslib.com manuals search engine

Steering System Diagram

❶ **Engine**
❷ **Tiller Arm**
❸ **Hydraulic Cylinder**
❹ **Steering Wheel**
❺ **Fill Port**
❻ **Helm Pump**
❼ **Console**
❽ **Hydraulic Hoses**

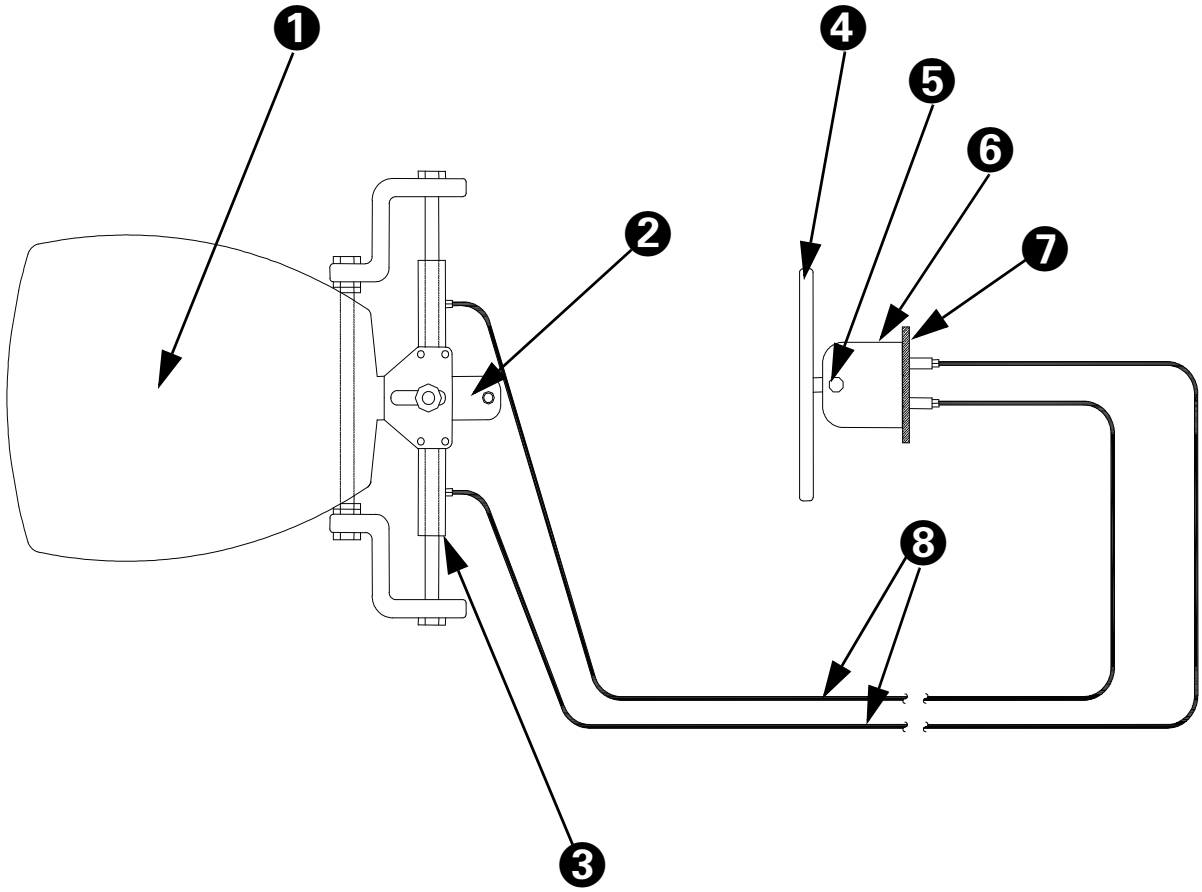

Downloaded from www.Manualslib.com manuals search engine

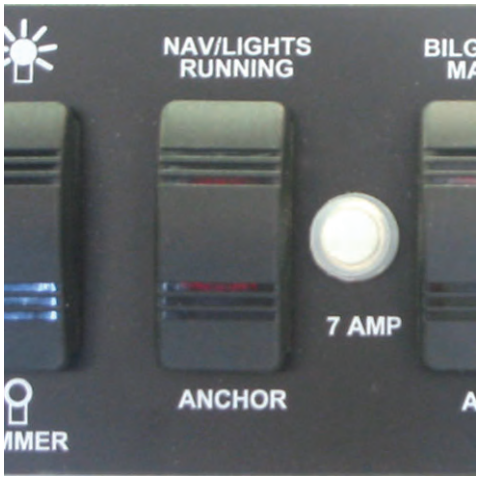

Navigation Lights

Your boat is equipped with navigation lights for your safety. Regulations state that all boats, regardless of size, must display navigation lights at night.

Your navigation lights let people operating other vessels know the approximate size of your boat and the direction your boat is traveling. Depending on which lights are displayed, they let people operating other vessels know your position while you are underway or anchored.

Your navigation lights must be displayed at night or in low visibility conditions. It is your responsibility to verify that the navigation lights are in working condition and that proper lighting is displayed.

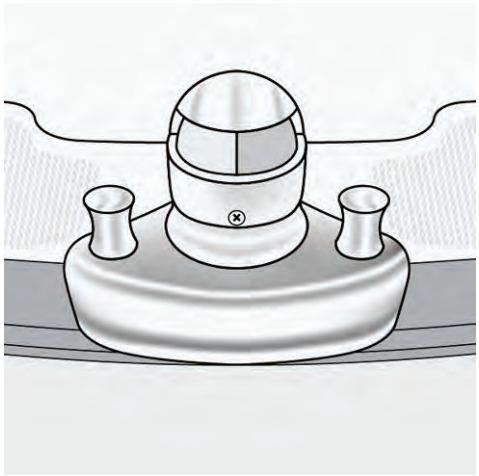

⚠ CAUTION

Installing after-market accessories such as radar domes, arches, and strobe lights can obstruct the navigation lights and decrease their effectiveness. It is your responsibility to comply with regulations regarding the normal operation of the navigation lights.

Operation

Operate your navigation lights using the switch located on the helm station switch panel. It is a three-position rocker switch marked NAV-ANCHOR.

While underway, move the switch to the **NAV** position. This turns on the port red, starboard green, and 360° white lights. The red and green lights are located in the bow chock assembly. The 360° white light is located on a mast.

At anchor, move the switch to the **ANCHOR** position. This turns on only the 360° white light.

The center position of the rocker switch is the **OFF** position. No lights are lighted when the switch is in the **OFF** position.

Downloaded from www.Manualslib.com manuals search engine

Bilge Pump

The bilge pump power circuit is wired directly to the battery side of the engine battery OFF-ON switch. The bilge pump system has an uninterruptible supply of power that is not affected by the position of the engine battery OFF-ON switch.

The uninterruptible bilge pump power circuit is protected by a 15-amp blade fuse. The fuse is located in a water-proof holder that is within seven inches of the engine battery OFF-ON switch.

Your boat has an 1100 gallon per hour (GPH) bilge pump located in the aft bilge. Pump operation is controlled by a rocker switch located on the helm station switch panel and a mechanical float switch located next to the bilge pump. The mechanical float switch senses water in the bilge and will turn on the bilge pump when the rocker switch is in the **AUTO** position.

The bilge pump and mechanical float switch can be serviced through an access plate in the engine splashwell. The bilge pump discharges water on the starboard side, just forward of the transom.

⚠ CAUTION

Test your bilge pump and float switch before each mission. Manually activate the float switch when the rocker switch is in the AUTO position and verify pump operation. Clear away any debris that might restrict the pump or float switch.

Downloaded from www.Manualslib.com manuals search engine

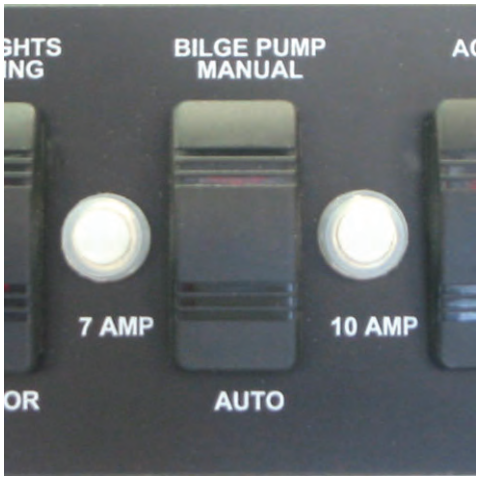

Operation

The bilge pump is controlled by a two-position rocker switch located on the helm station switch panel. The **AUTO** switch position supplies power to the mechanical float switch so water is pumped anytime it is detected.

The rocker switch has a red LED indicator that will be lighted anytime the bilge pump is running.

⚠ CAUTION

Keep the bilge pump switch in the AUTO position anytime the bilge drain plug is in place, whether the boat is in the water or on a trailer. Keeping the switch in the AUTO position allows the system to sense rainwater or melting snow that might accumulate in the bilge.

The **MANUAL** switch position provides power directly to the bilge pump. When the rocker switch is in the **MANUAL** position, the bilge pump will run even if there is no water in the bilge.

The rocker switch has a red LED indicator that will be lighted anytime the bilge pump is running.

⚠ CAUTION

The bilge pump will be damaged if it is run continuously when no water is in the bilge.

Downloaded from www.Manualslib.com manuals search engine

Trim Tabs

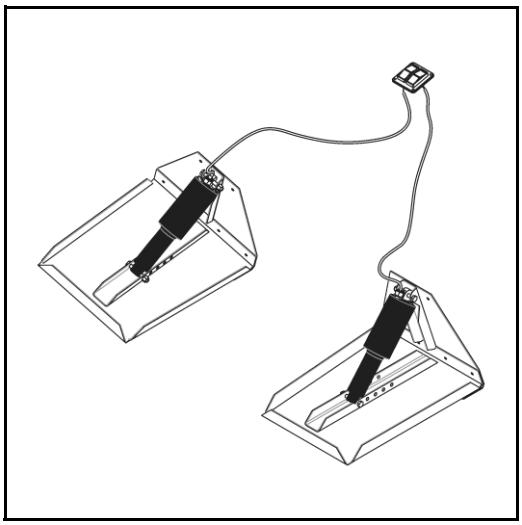

Your boat is equipped with Lenco® electro-mechanical trim tabs. The trim tab system consists of four major components. The switch panel with LED tab indicators is located on the control console. The system control box is located inside the control console. There are also two electro-mechanical actuator assemblies with stainless steel trim planes fastened to the transom.

When the switches are pressed, the trim tabs move into position. Water force on the trim tab surface creates upward pressure, raising the stern and lowering the bow. Properly sized trim tab planes improve the performance of your boat over wider load range, weather, and water conditions.

The switch panel is labeled to make tab operation simple. When operating the trim switches, think of how you want the **bow of the boat** to move to properly trim the boat.

To lower the **port** side of the bow, push the left switch forward. This lowers the trim plane on the **starboard** side of the transom.

To lower the **starboard** side of the bow, push the right switch forward. This lowers the trim plane on the **port** side of the transom.

To evenly lower or raise the bow, you can push both switches in the same direction at the same time. To evenly **lower** the bow, push both switches **forward**. To evenly **raise** the bow, push both switches **back**.

The Lenco switch panel includes two LED segment bars that represent the relative position of both trim tabs. When you **lower** one or both of the trim tabs, the LED segment bars will extend to indicate that the trim tabs are moving down. When you **raise** one or both of the trim tabs, the LED segment bars will retract to indicate that the trim tabs are moving up.

Downloaded from www.Manualslib.com manuals search engine

Trim Tab Control Box

The trim tab control box, located inside the control console, operates on power supplied through the accessory fuse block. The trim tab power circuit is protected a 20-amp blade fuse. The trim tab control box senses 12 VDC when the outboard engine ignition key switch is in the ON position.

Because the trim tab control box senses switched 12 VDC at the outboard engine ignition switch:

- The trim tab system will only operate when the outboard engine ignition switch is **ON**
- The trim tabs will automatically retract when the outboard engine ignition switch is turned **OFF**

⚠ CAUTION

The trim tabs will automatically retract when the outboard engine is turned OFF. Make sure that both trim tabs are fully retracted before you put the boat on a trailer, cradle, or boatlift. Contact with the trim tabs can cause serious damage to the tabs and the boat.

Downloaded from www.Manualslib.com manuals search engine

Proper Boat Trim

All boats “break over” or get on plane at a particular speed. This speed is determined by load distribution, water conditions, and other factors. Trim tabs allow your boat to plane at speeds below the natural planing speed. By pressing the control to the **BOW DOWN** position, your trim tabs move down. This will raise your stern and lower your bow, getting the boat on plane sooner.

When learning to use trim tabs, begin by pressing the control switches in ½ second bursts for gradual trimming. A momentary delay occurs from the time you move the control switches to the time the boat reacts. This is normal and varies with boat speed. Be careful not to over-trim the boat. An over-trimmed boat will “plow” or “bow-steer”. If you over-trim the boat, push both trim switches back to raise the bow.

⚠ WARNING

The boat’s attitude and steering effort can react very quickly to changes in trim tab position. Adjust trim tab deployment in small increments to avoid loss of boat control.

Rough Water

When running in chop or heavy seas, press both switches forward to lower the bow elevation. This will bring the “V” of the hull in more contact with the waves and reduce the pounding effect.

⚠ WARNING

Do not over-trim, particularly at high speeds, as the bow will dig in and wave action might cause the boat to veer. While underway, do not move one trim tab significantly farther down than the other, as undesirable listing will occur.

Downloaded from www.Manualslib.com manuals search engine

Trim Tabs and Engine

Adjusting the trim tabs in conjunction with the trim function of your outboard engine will give you increased power, speed, and maneuverability. When the boat comes on plane adjust the trim tabs to achieve the desired running attitude of the boat. Then trim the outboard engine up using the trim function on the single-lever control until the engine propeller is parallel with the surface of the water. If necessary, readjust the trim tabs to fine tune the running attitude of the boat.

Downloaded from www.Manualslib.com manuals search engine

Compass

⚠WARNING

All magnetic compasses are subject to magnetic interference, which can produce errors called deviation. Compass deviation can contribute to inaccurate course plotting and position fixes, placing your crew, your boat, and others at risk.

Deviation

Your magnetic compass is located in line with the helm station, below the operator's line of sight so it can be easily read during normal boat operation.

The location of your compass has been selected to minimize deviation caused by other equipment installed on the boat. Magnets, ferrous metals, and current-carrying devices are common causes of deviation.

Periodically check the alignment of the compass to verify that it is installed properly and compensated. Compensation is the act of correcting for deviation.

Refer to the compass manufacturer's literature for detailed information about the compensation procedure.

Variation

It is important to understand that magnetic compasses point toward **magnetic north**. There is a difference between magnetic north and true north. That difference is called variation. Variation differs depending on your geographical location and can be determined by referring to a local chart.

Night Lighting

The internal red night operation light is connected to the lighting circuit of the engine gauges. The compass night light, like the engine gauge lights, is dimmed using the dimmer switch on the helm station switch panel.

Downloaded from www.Manualslib.com manuals search engine

Battery Parallel Switch

Your boat is equipped with an emergency battery parallel switch. The switch is located on the control console face. You can use the emergency battery parallel switch to connect the house battery and the engine starting battery in parallel if the outboard engine will not start due to low battery voltage.

The battery parallel switch controls a solenoid that connects the two batteries. The switch is a three-position rocker switch that is ON-OFF-ON. The center switch position is OFF. Both the left and right switch positions are momentarily ON when held down. When you release the switch, it will return to the center OFF position.

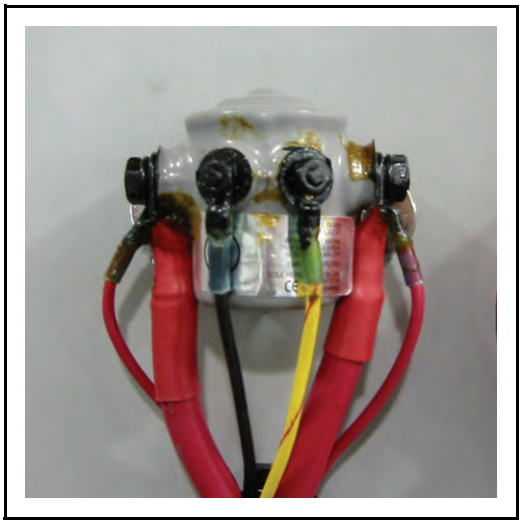

If your outboard engine will not start due to low battery voltage, use the battery parallel switch to provide power from the house battery.

Push and hold the battery parallel switch ON to either the left or right position. Note this position. Hold the battery parallel switch in the ON position and try to start the engine.

If the engine does not start, release the battery parallel switch to the OFF position. Move the battery parallel switch to ON in the opposite direction. Hold the battery parallel switch in the ON position and try to start the engine.

The emergency battery parallel system is protected by two 10-amp in-line blade fuses wired to the load sides of both battery OFF-ON switches. The two in-line blade fuses protect the electrical wiring between the solenoid and battery parallel switch.

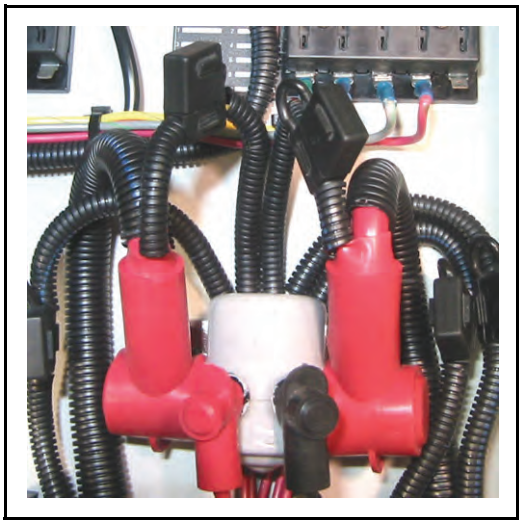

Periodically check the condition of the two 10-amp in-line blade fuses located next to the parallel solenoid. One blown fuse would not allow the battery parallel solenoid to function in one switch position.

Downloaded from www.Manualslib.com manuals search engine

T-top Combination Light

If your boat is equipped with a T-top, you have a combination red/white light fixture above the helm area. Operation of the red/white light is controlled by its black bezel. There is no OFF-ON switch on the helm station switch panel. Rotate the bezel in either direction to select the color and intensity of the overhead light.

The T-top combination light is protected by a 1-amp blade fuse located in the fuse block inside the T-top radio box.

Turn off the T-top combination light when it is not required to avoid discharging the house battery.

Turning the house battery OFF-ON switch to the **OFF** position at the end of your mission will cut power to the T-top combination light circuit.

Cockpit Lighting

Your boat might be equipped with red cockpit night lighting. The lights are used to illuminate the deck surfaces without creating glare at night. The red cockpit lights are usually installed in pairs. Typically they are located on the interior hull sides under the gunwale boards or ring deck.

To operate the red cockpit lights, turn the COCKPIT LIGHTS switch at the helm station switch panel to the ON position. Each cockpit light fixture also has an OFF-ON switch that is used to control the individual light fixture.

The cockpit light circuit is protected by a 10-amp blade fuse located in the accessory fuse block inside the control console.

Turn off the cockpit lights when they are not required to avoid discharging the house battery.

Turning the house battery OFF-ON switch to the **OFF** position at the end of your mission will cut power to the cockpit light circuit.

Downloaded from www.Manualslib.com manuals search engine

Siren and Strobe Light

Your boat might be equipped with a Whelen® flush-mount siren and strobe light. The normal mounting location is on the forward side of the console.

Use the siren control head to operate the various strobe, radio, siren, and public address features.

The siren amplifier circuit is protected by a 10-amp blade fuse located in the accessory fuse block inside the control console.

Turn off the siren and strobe features when they are not required to avoid discharging the house battery.

Turning the house battery OFF-ON switch to the **OFF** position at the end of your mission will cut power to the siren amplifier and strobe power circuits.

Refer to the Whelen operator's manual for detailed information about the siren and strobe functions.

Floodlights

Your boat might be equipped with one or more 12 VDC floodlights. The floodlights are usually mounted on the T-top frame. You can use the floodlights to illuminate the deck or surrounding water while you are working or doing boarding operations.

Each floodlight is controlled by an OFF-ON rocker switch located on the T-top radio box switch panel. Each floodlight power circuit is protected by a 10-amp blade fuse in the T-top fuse block.

Turn off the floodlights when they are not required to avoid discharging the house battery.

Turning the house battery OFF-ON switch to the **OFF** position at the end of your mission will cut power to all of the floodlight circuits.

Downloaded from www.Manualslib.com manuals search engine

Signal Horn

Your boat is equipped with a 12 VDC signal horn. The signal horn is mounted on the forward face of the control console. The horn button is on the control console, just to the left of the steering wheel. This signal horn satisfies United States Coast Guard Navigation Rule 36 for signals to attract attention.

The signal horn circuit is protected a 10-amp blade fuse located in the accessory fuse block inside the control console.

Turning the house battery OFF-ON switch to the **OFF** position at the end of your mission will cut power to the signal horn circuit.

Battery Status Indicator

Your boat is equipped with a battery status indicator panel. The panel is mounted on the control console face. The panel has a green LED that is lighted anytime a battery switch or a boat accessory circuit is powered and active.

Turn all battery OFF-ON switches to the OFF position before you leave the boat unattended for any period of time. Check to make sure that the battery status green LED is not lighted.

Leaving the boat with the battery status green LED lighted might allow one or more of the batteries to become discharged.

Bilge Pump Special

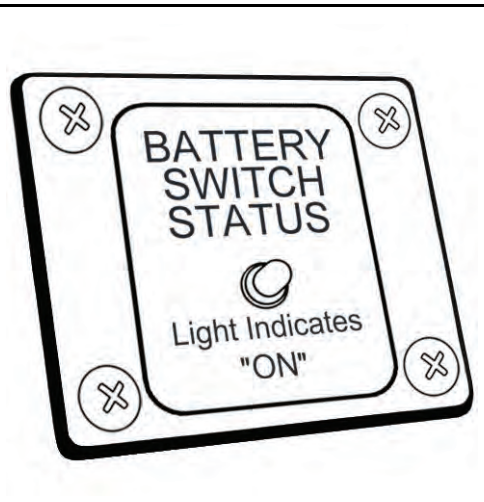

The only exception to the 12 VDC circuit control described above is the bilge pump system. The bilge pump system has an uninterruptible power supply that originates at the battery side of the engine battery OFF-ON switch. The bilge pump system is powered and active regardless of the position selected on either of the battery OFF-ON switches.

Downloaded from www.Manualslib.com manuals search engine

Towing System

Your boat might be equipped with a tow post. Towing another boat requires experience and skill. Always operate any boat within the limits of your experience. If you do not have this experience, ask someone to instruct you or gain experience through experimentation under controlled conditions.

⚠ CAUTION

Your tow post is designed to tow another boat of similar displacement at non-planing speeds for an unrestricted period of time.

⚠ DANGER

Never allow personnel to stand near a deployed tow rig. The tow line or a tow component could fail with a high level of energy, causing serious injury or death.

Towing a Boat

Understand this information before towing another boat:

- Evaluate the condition of the target boat and its crew before beginning a tow operation.
- Remove all non-essential crew from the target boat.
- Make sure that all tow rig components on both boats are of sufficient capacity for the tow.
- Set the tow rig as low and as close to the boat centerlines as possible.
- Take at least one-half turn around the tow post before you secure the tow line using a series of figure eights.
- **DO NOT** use any knots to secure the tow line.
- Set engines or rudders on target boat to maintain station behind your boat.

Downloaded from www.Manualslib.com manuals search engine

- Keep all crew in both boats clear of the tow rig.
- Keep your tow rig clear of your engine and propeller.
- Always avoid shock loading your tow rig and towing system.
- Maintain communications with crew on target boat.
- Continuously evaluate condition of tow rig and target boat.

Being Towed

Understand this information before being towed by another boat:

- Evaluate the condition of your boat before beginning the tow operation.
- Remove all non-essential cargo and crew from your boat.
- Make sure that all tow rig components on both boats are of sufficient capacity for the tow.
- Set the tow rig as low and as close to the boat centerlines as possible.
- Use your boat's bow eye as the attachment point for the tow rig.
- Set your engine to maintain station behind the towing boat.
- Keep your crew behind the console, clear of the tow rig.
- Maintain communications with crew on the towing boat.
- Continuously evaluate condition of your boat and the tow rig.

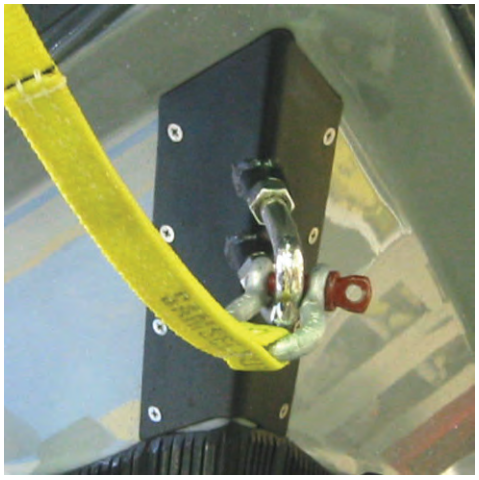

Downloaded from www.Manualslib.com manuals search engine

Swimmer's Ladder

Your boat might be equipped with a swimmer's ladder and boarding platform. The boarding platform is permanently attached to the port transom.

- **Never** move the boat when the swimmer's ladder is deployed.
- Always retract and secure the swimmer's ladder when you are not using it.

⚠ DANGER

Never start or operate the engine when people are in the water near your boat. Contact with the boat, engine, or rotating propeller can cause serious injury or death.

Downloaded from www.Manualslib.com manuals search engine

General Description

Your boat is equipped with a 12 Volt Direct Current (12 VDC) electrical system. The 12 VDC electrical system provides power to all DC electrical loads on the boat.

The complete 12 VDC electrical system consists of **six main power distribution circuits** that are electrically connected on the negative side of the system.

Power for all 12 VDC systems is normally supplied by a house battery and an engine starting battery.

Both batteries are charged when the outboard engine is running above idle speed, regardless of battery OFF-ON switch position.

Each electrical circuit is configured as a two-wire, negative-return system, which includes a 12 VDC power lead and a negative-return lead. Each electrical circuit is powered by one of two 12-volt batteries, is controlled by one of two battery OFF-ON switches, and is protected by two or more circuit breakers.

All 12 VDC wiring in your boat conforms to ASTM Standard B-33 and is premium-grade tinned copper marine cable, designed to minimize voltage drop and resist corrosion. The termination of each 12 VDC electrical circuit is protected from moisture intrusion by self-sealing heat-shrink insulation on each connector.

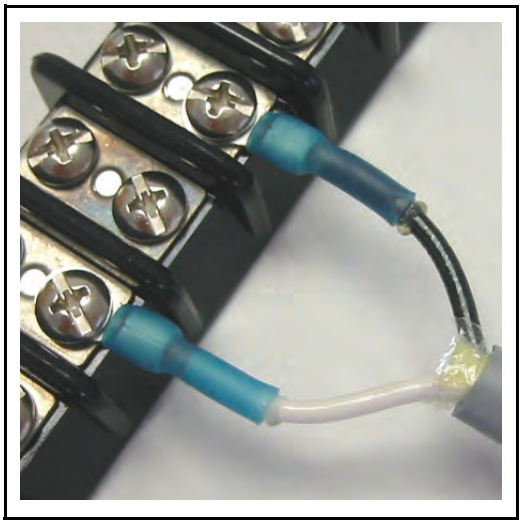

Downloaded from www.Manualslib.com manuals search engine

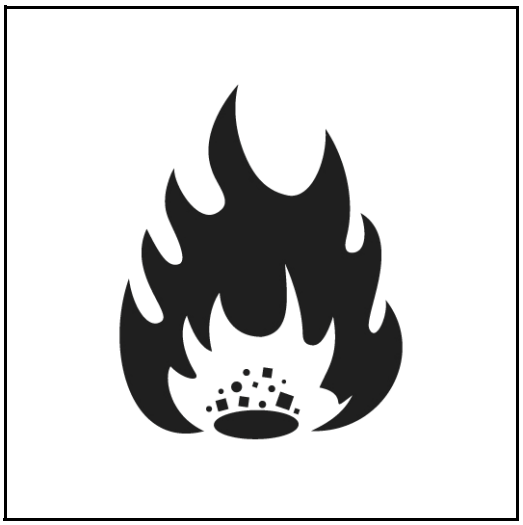

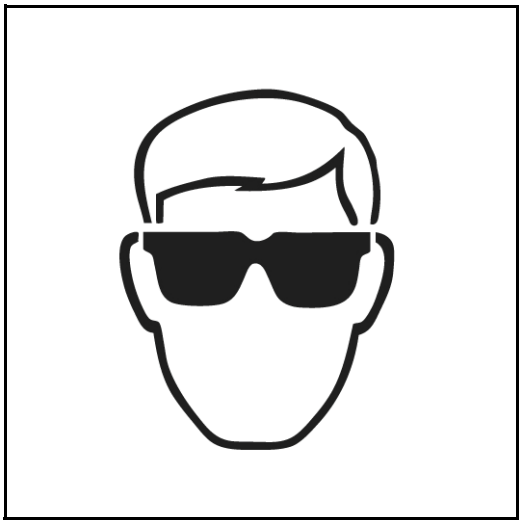

Batteries

Safety Warnings

⚠ CAUTION

Batteries should always be enclosed in the covered battery boxes provided with your boat. The boxes will contain any spilled acid and will protect the battery terminals from damage or shorting due to contact with metal objects. The battery boxes should always be secured using the heavy-duty straps and aluminum trays provided. The boxes, heavy-duty straps, and aluminum trays are designed to hold the batteries in place while the boat is underway, reducing the possibility of damage to the batteries and other equipment in the storage area.

⚠ DANGER

Never use an open flame in the battery storage area. Avoid striking sparks near the batteries. A battery can explode if a flame or spark ignites the free hydrogen gas vented during charging. Always disconnect the batteries before doing any work on the 12 VDC electrical systems.

⚠ WARNING

Always wear eye protection when servicing batteries. Batteries contain sulfuric acid, which can cause serious injury. Avoid contact with skin, eyes, and clothing. If contact occurs, immediately flush the affected area with water and call for medical assistance.

Downloaded from www.Manualslib.com manuals search engine

Capacities

Exide® marine heavy-duty 12-volt batteries are normally selected for your boat. One Group 24 1000 marine cranking amp (MCA) battery is provided for engine starting and one Group 27 115 amp hour, deep cycle battery is normally provided for the boat's electrical accessories. These batteries are considered wet-cell and require periodic maintenance.

Your boat might be equipped with Optima® Blue Top marine batteries. Optima batteries use spiral cell technology to improve vibration resistance and service life. These batteries are classified as non-spillable and do not require periodic checks of electrolyte levels.

With proper care, these marine heavy-duty batteries will last several years.

Maintenance

Only use elastic lock nuts with flat washers or standard hex nuts with split lock washers and flat washers to secure cables to the battery terminals. **DO NOT** use wing nuts to secure cables to the battery terminals.

Periodic battery maintenance is important to assure that the boat will be ready for operation when needed. Battery maintenance should include:

- Inspect the batteries and charging systems before each mission for loose connections and damaged wiring.
- Check and maintain the electrolyte level in all wet-cell batteries. **Add distilled water only, as necessary.**
- Coat the terminals and cable connections with heavy grease to reduce corrosion.
- Keep the batteries dry and clean.

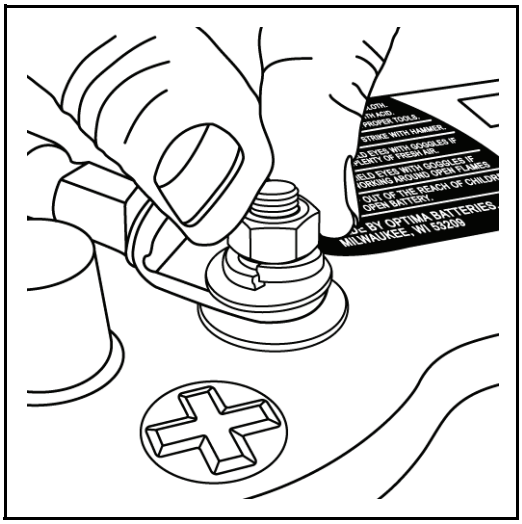

Downloaded from www.Manualslib.com manuals search engine

Remove the batteries from the boat during cold weather or off-season storage. Always protect the batteries from freezing temperatures.

You must not allow your batteries to become completely discharged. As a battery discharges, the active material on both positive and negative plates changes to lead sulfate, causing the plates to become similar in chemical composition. The battery electrolyte becomes weaker and the voltage drops. As the battery remains discharged, this process continues until recharging the battery becomes impossible.

If the battery does become discharged, be sure to recharge it as soon as possible. Overcharging a battery can also reduce its effective life.

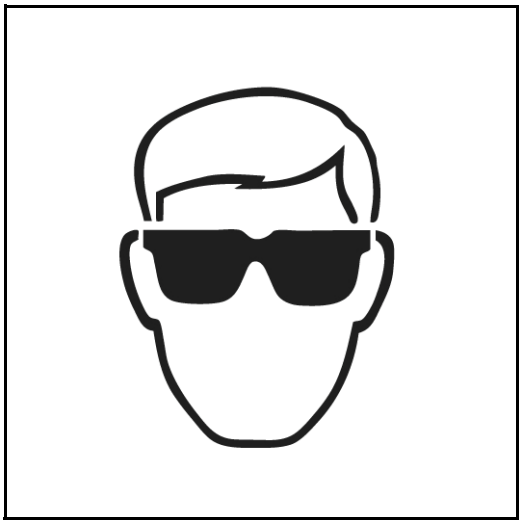

Cleaning

⚠ WARNING

Always wear eye protection when servicing batteries. Batteries contain sulfuric acid, which can cause serious injury. Avoid contact with skin, eyes, and clothing. If contact occurs, immediately flush the affected area with water and call for medical assistance.

At least once a year, or when they appear to have dirt or corrosion on the terminals, the batteries should be cleaned. To clean the batteries, turn the battery OFF-ON switches to the OFF position. Disconnect the battery cables from the terminals. **Remove the negative (black) cable first.** Remove the battery from the plastic battery box. Clean the terminals and casing with a solution of baking soda and water. Use a soft wire brush on the terminals. Do not allow the cleaning solution to enter the battery cells. Wipe the battery and terminals dry with a clean cloth. Clean the battery cable ends in the same manner. Connect the cables to the appropriate terminals and recoat the cable connections with heavy grease. **Connect the positive (red) cable first.**

Downloaded from www.Manualslib.com manuals search engine

Charging

The outboard engine alternator charges the two batteries when the engine is running above idle speed. The batteries are charged through a marine-grade battery charge isolator, which allows the outboard engine alternator to charge the starting battery and the house battery. Both batteries are charged when the outboard engine is running above idle speed, regardless of battery OFF-ON switch position.

The battery charge isolator output circuits are protected by two 70-amp push-button circuit breakers located inside the control console.

The charge isolator also prevents a higher-charged battery ❶ from discharging into a lower-charged battery ❷ by keeping the batteries electrically isolated.

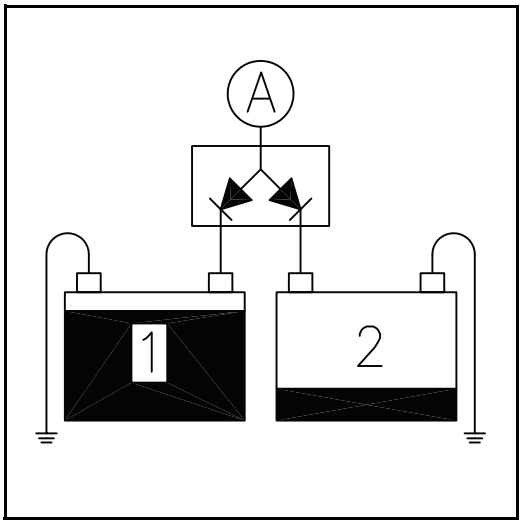

If a battery fails to accept a charge from the engine alternator, check the following items before replacing the battery:

- Check the two 70-amp push-button circuit breakers
- Check for unexpected current draw from boat electrical devices
- Check the engine alternator following the engine manufacturer's instructions
- Check for loose, corroded, or damaged wiring

Your boat might be equipped with an integral two-bank battery charger that charges both batteries when the charger is connected to a 115 VAC GFCI power source. Both batteries are charged when the battery charger is active, regardless of battery OFF-ON switch positions.

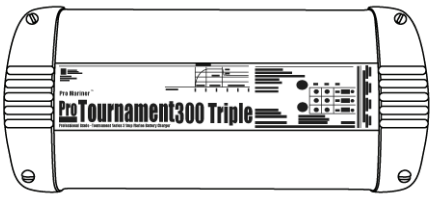

The AC battery charger output circuits are protected by two 40-amp push-button circuit breakers located inside the control console.

Downloaded from www.Manualslib.com manuals search engine

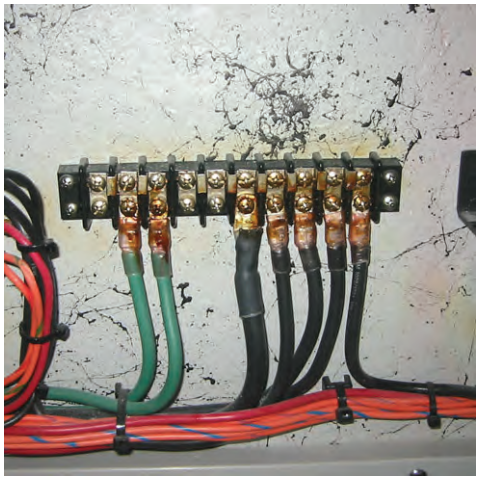

Grounding and Bonding

Definitions

The terms grounding and bonding are often incorrectly used interchangeably. They are different systems that can work together to provide solutions to common problems and risks on the water.

Bonding is the process of connecting various metal components in the boat to a common electrical contact. This helps to reduce the chance of rails and other metal objects carrying dangerous electrical charges.

Grounding is defined as the method in which any electrical potential is connected to the surrounding water for the purpose of energy dissipation.

Properly designed grounding and bonding systems incorporating zinc or aluminum anodes and bronze plates will also help control corrosion of aluminum and stainless steel parts.

Grounding

The negative terminals of both batteries and the negative cable from the outboard engine are connected together at a negative buss bar located inside the control console. This negative buss bar serves as the return point for the entire 12 VDC electrical system.

The accessory fuse block and negative terminal strip also connect to the negative side of the 12 VDC electrical system at the buss bar. The connections are made with #8 awg black wires from each device.

Note: All grounding wires and cables are **black**.

Downloaded from www.Manualslib.com manuals search engine

Bonding

Your boat's bonding system starts with a bronze plate located below the water line at the center of the transom. A #8 awg green cable connects the bronze plate to the negative buss system. The fuel tank, fuel fill, control console, engine crash rail, leaning post, and transom cap are also connected to the negative buss system with #8 awg green cables.

Also directly connected to the bonding system are any shielded cables from electronic devices. This helps dissipate radio frequency interference generated by various electronic devices.

Note: All bonding wires and cables are **green**.

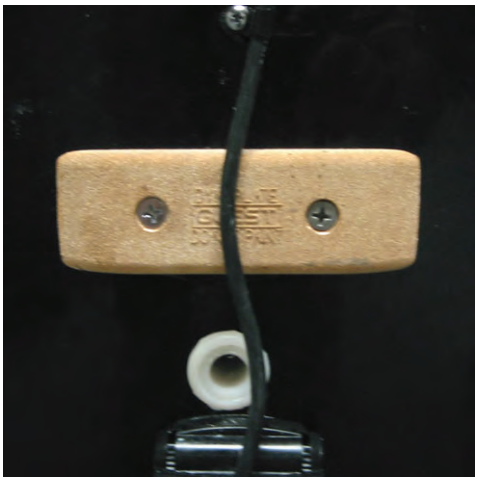

Downloaded from www.Manualslib.com manuals search engine

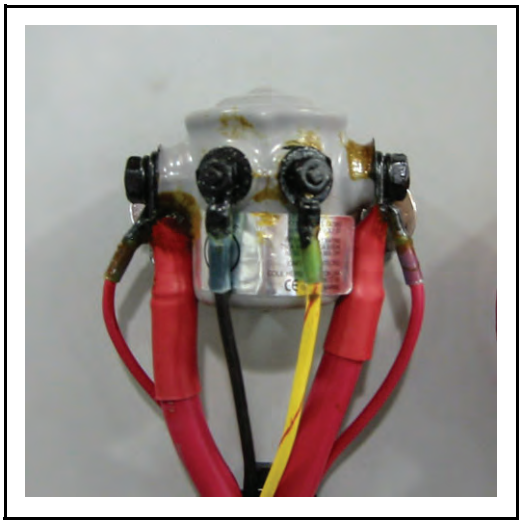

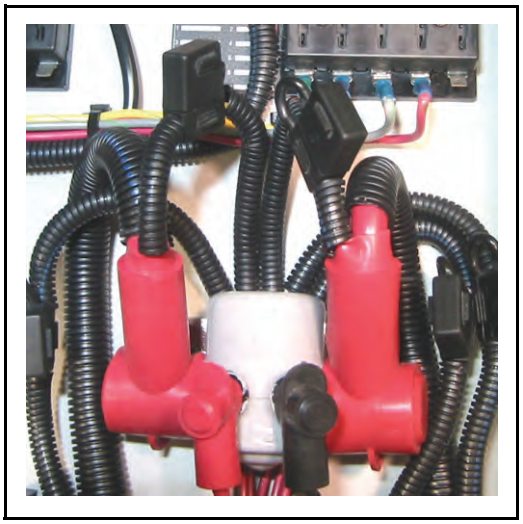

Battery Switches

Battery Parallel Switch

Your boat is equipped with an emergency battery parallel switch. The switch is located on the control console face. You can use the emergency battery parallel switch to connect the house battery and the engine starting battery in parallel if the outboard engine will not start due to low battery voltage.

The battery parallel switch controls a solenoid that connects the two batteries. The switch is a three-position rocker switch that is ON-OFF-ON. The center switch position is OFF. Both the left and right switch positions are momentarily ON when held down. When you release the switch, it will return to the center OFF position.

If your outboard engine will not start due to low battery voltage, use the battery parallel switch to provide power from the house battery.

Push and hold the battery parallel switch ON to either the left or right position. Note this position. Hold the battery parallel switch in the ON position and try to start the engine.

If the engine does not start, release the battery parallel switch to the OFF position. Move the battery parallel switch to ON in the opposite direction. Hold the battery parallel switch in the ON position and try to start the engine.

The emergency battery parallel system is protected by two 10-amp in-line blade fuses wired to the load sides of both battery OFF-ON switches. The two in-line blade fuses protect the electrical wiring between the solenoid and battery parallel switch.

Periodically check the condition of the two 10-amp in-line blade fuses located next to the parallel solenoid. One blown fuse would not allow the battery parallel solenoid to function in one switch position.

Downloaded from www.Manualslib.com manuals search engine

Battery OFF-ON Switches

Your boat is equipped with two battery OFF-ON switches that allow you to turn battery power on and off to the outboard engine and to each main 12 VDC power distribution circuit in the boat. The switches are located in the control console, just inside the console door.

- One battery switch controls power to all main 12 VDC power distribution circuits
- One battery switch controls power to the outboard engine and some of its accessories

⚠ CAUTION

Never move engine battery OFF-ON switch to the OFF position while the outboard engine is running. Moving the engine battery OFF-ON switch to the OFF position while the engine is running will cause immediate damage to the engine's charging system.

You can disable each battery OFF-ON switch by removing its handle. Turn the switch handle an additional 20° counter-clockwise from the OFF position to remove it. Disabling the battery OFF-ON switches gives you an additional level of security if the boat is left unattended.

Bilge Pump Special

The only exception to the 12 VDC circuit control described on this page is the **bilge pump system**. The 15-amp in-line blade fuse that protects the bilge pump system has an uninterruptible power supply that originates at the battery side of the **engine** battery OFF-ON switch. The bilge pump system is powered and active regardless of the position selected on either of the battery OFF-ON switches.

Downloaded from www.Manualslib.com manuals search engine

Operator Notes

Downloaded from www.Manualslib.com manuals search engine

DC Power Distribution

All DC electrical devices and systems in your boat are controlled and protected by **six** main 12 VDC power distribution circuits.

Outboard Engine

Main 12 VDC power circuit 1 of 6 provides power for starting the outboard engine through a battery OFF-ON switch connected to a Group 24 1000 MCA battery. The outboard engine battery OFF-ON switch is located in the control console, just inside the console door.

The main power and negative cables from the outboard engine route through the splash-well boot and connect to this power circuit through a main two-position, heavy-duty terminal strip located near the transom. The main terminal strip simplifies engine removal for service or replacement.

Turning the outboard engine battery OFF-ON switch to the **OFF** position at the end of your mission will cut power to the outboard engine and its accessories.

See **Wire Color Chart** in this section for wire colors.

Downloaded from www.Manualslib.com manuals search engine

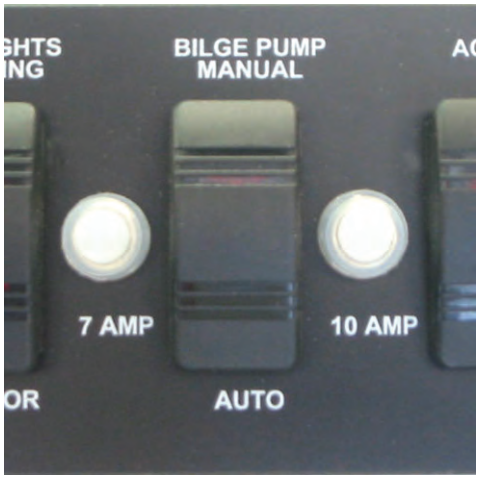

Bilge Pump

Main 12 VDC power circuit 2 of 6 provides uninterruptible power to the bilge pump switch located on the helm station switch panel. The circuit is directly connected to the outboard engine battery OFF-ON switch. The connection is made on the **battery side** of the battery OFF-ON switch and is always powered, regardless of switch position.

The circuit is protected by one 15-amp, in-line blade fuse located within seven inches of the outboard engine battery OFF-ON switch.

If the 15-amp blade fuse fails electrically, troubleshoot the power circuit and the bilge pump before you replace the fuse.

This uninterruptible power circuit provides flexibility in controlling your bilge pump. With the outboard engine battery OFF-ON switch in the **OFF** position, you can still operate your bilge pump in the automatic or manual mode.

See **Wire Color Chart** in this section for wire colors.

Downloaded from www.Manualslib.com manuals search engine

Helm Station Switch Panel

Main 12 VDC power circuit 3 of 6 provides power to the helm station switch panel.

The bilge pump switch is located on the helm station switch panel, but it is not included in this power circuit.

This circuit is protected by one 60-amp, push button breaker. The 60-amp breaker is located inside the control console within seven inches of the house battery OFF-ON switch.

One Group 27 115 amp hour, deep cycle battery normally powers this circuit through the house battery OFF-ON switch.

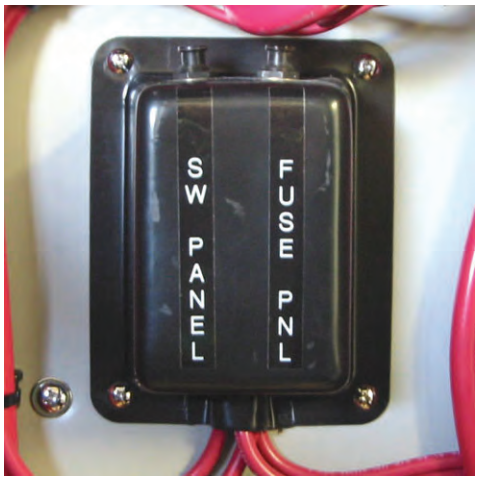

The helm station switch panel has no connection to the negative side of the 12 VDC electrical system. Any accessories installed on these switches must also connect to the negative side of the 12 VDC electrical system through the negative terminal strip provided. One negative terminal strip is located in the control console.

If the 60-amp breaker trips electrically, troubleshoot the power circuit and its protected devices before you reset the breaker.

Turning the house battery OFF-ON switch to the **OFF** position at the end of your mission will cut power to all of the helm station switch panel circuits **except the bilge pump system**.

See **Wire Color Chart** in this section for wire colors.

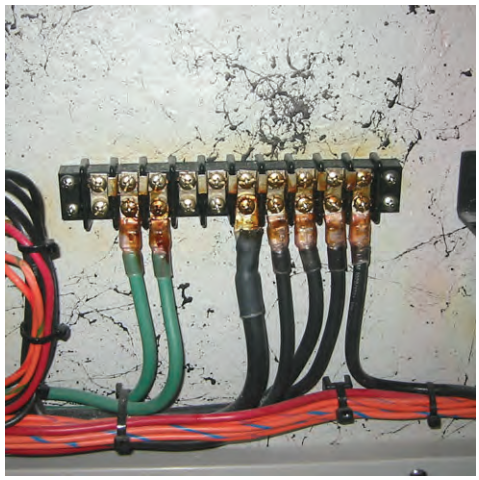

⚠ CAUTION

The total combined amperage ratings for all accessories connected to the helm station switch panel must not exceed 60 amps. Overloading the helm station switch panel might cause repeated tripping of the 60-amp breaker and other electrical problems.

Downloaded from www.Manualslib.com manuals search engine

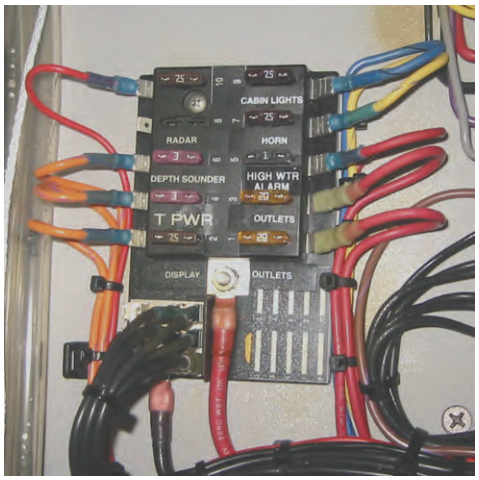

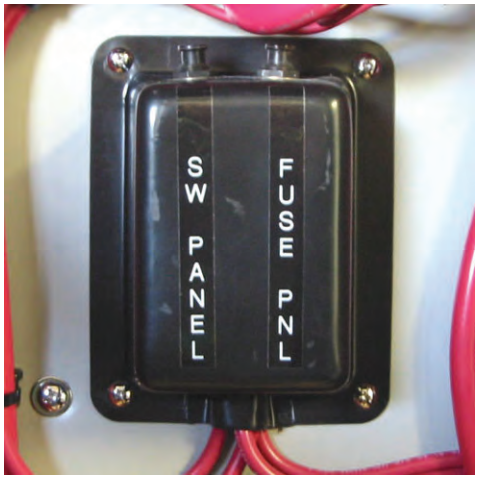

Accessory Fuse Block

Main 12 VDC power circuit 4 of 6 provides power to the accessory fuse block located inside the control console.

This circuit is protected by one 60-amp, push button breaker. The 60-amp breaker is located inside the control console within seven inches of the house battery OFF-ON switch.

One Group 27 115 amp hour, deep cycle battery normally powers this circuit through the house battery OFF-ON switch.

Ten branch circuits can be connected to the 12 VDC electrical system at the accessory fuse block. The accessory fuse block also has ten connection points for the negative side of the 12 VDC electrical system. Some of the electrical accessories might have been installed at the factory.

If the 60-amp breaker trips electrically, troubleshoot the power circuit and its protected devices before you reset the breaker.

Turning the house battery OFF-ON switch to the **OFF** position at the end of your mission will cut power to the accessory fuse block.

See **Wire Color Chart** in this section for wire colors.

⚠ CAUTION

The total combined amperage ratings for all accessories connected to the fuse block must not exceed 60 amps. Overloading the accessory fuse block might cause repeated tripping of the 60-amp breaker and other electrical problems.

Downloaded from www.Manualslib.com manuals search engine

T-top Fuse Block

Main 12 VDC power circuit 5 of 6 provides power to the fuse block located inside the T-top electronics box.

This circuit is protected by one 60-amp, push button breaker. The 60-amp breaker is located inside the control console within seven inches of the house battery OFF-ON switch.

One Group 27 115 amp hour, deep cycle battery normally powers this circuit through the house battery OFF-ON switch.

Ten branch circuits can be connected to the 12 VDC electrical system at the T-top electronics fuse block. The T-top electronics fuse block also has ten connection points for the negative side of the 12 VDC electrical system. Some of the electronics might have been installed at the factory.

If the 60-amp breaker trips electrically, troubleshoot the power circuit and its protected devices before you reset the breaker.

Turning the house battery OFF-ON switch to the **OFF** position at the end of your mission will cut power to the T-top electronics fuse block.

See **Wire Color Chart** in this section for wire colors.

⚠ CAUTION

The total combined amperage ratings for all accessories connected to the T-top fuse block must not exceed 60 amps. Overloading the T-top fuse block might cause repeated tripping of the 60-amp breaker and other electrical problems.

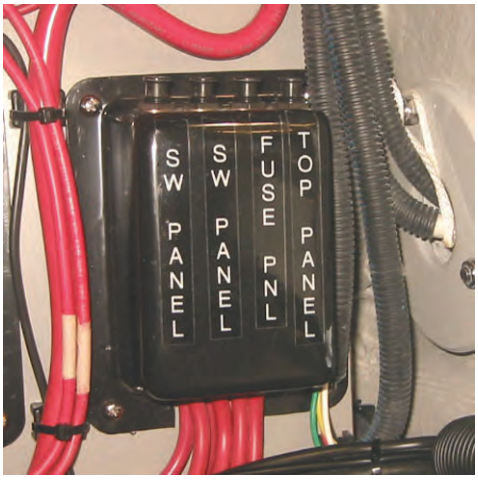

Downloaded from www.Manualslib.com manuals search engine

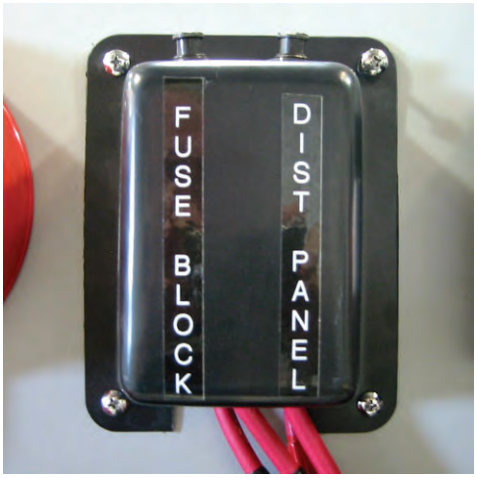

Electronics Distribution Panel

Main 12 VDC power circuit 6 of 6 provides power to the electronics distribution panel (optional) located inside the control console.

This circuit is protected by one 60-amp, push button breaker. The 60-amp breaker is located inside the control console within seven inches of the house battery OFF-ON switch.

One Group 27 115 amp hour, deep cycle battery normally powers this circuit through the house battery OFF-ON switch.

The electronics distribution panel has eight switchable circuit breakers controlled by one main 50-amp switchable breaker. This panel provides a convenient point to connect all existing and future electronics. The electronics distribution panel also has nine connection points for the negative side of the 12 VDC electrical system. Some of the electronics might have been installed at the factory.

If the 60-amp breaker trips electrically, troubleshoot the power circuit and its protected devices before you reset the breaker.

Turning the house battery OFF-ON switch to the **OFF** position at the end of your mission will cut power to the electronics distribution panel.

See **Wire Color Chart** in this section for wire colors.

⚠ CAUTION

The total combined amperage ratings for all electronics connected to the distribution panel must not exceed 60 amps. Overloading the electronics distribution panel might cause repeated tripping of the 60-amp breaker and other electrical problems.

Downloaded from www.Manualslib.com manuals search engine

DC Circuit Distribution

Helm Station Switch Panel

A typical helm station switch panel includes these functions:

- Dimmer for dash lights
- Bilge pump
- Navigation lights
- Cockpit lights
- Spares

The **dimmer** switch controls backlighting brightness level on all engine gauges, dash components, and the magnetic compass.

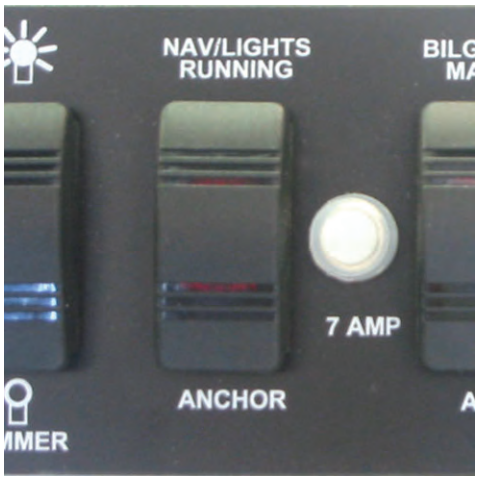

The **navigation lights** switch controls the red, green, and 360° white lights for night operations. You can select all navigation lights while underway or the 360° white light by itself for anchoring.

The **cockpit lights** switch provides power to the aft cockpit red lights (optional) mounted under the port and starboard gunwales. Each cockpit light also has its own OFF-ON switch.

Several **spare** switches are provided for installation of future electrical devices. Each spare switch is rated at 10 amps.

See **Wire Color Chart** in this section for wire colors.

Downloaded from www.Manualslib.com manuals search engine

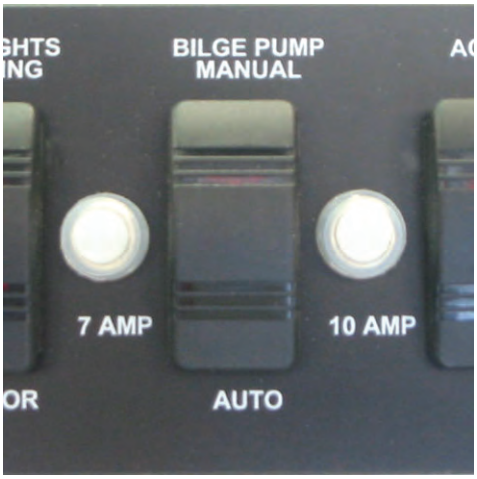

The bilge pump is controlled by a two-position rocker switch. The **AUTO** switch position supplies power to a mechanical float switch so water is pumped anytime it is detected.

The rocker switch has a red LED indicator that will be lighted anytime the bilge pump is running.

⚠ CAUTION

Keep the bilge pump switch in the AUTO position anytime the bilge drain plug is in place, whether the boat is in the water or on a trailer. Keeping the switch in the AUTO position allows the system to sense rainwater or melting snow that might accumulate in the bilge.

The **MANUAL** switch position provides power directly to the bilge pump. When the rocker switch is in the **MANUAL** position, the bilge pump will run even if there is no water in the bilge.

The rocker switch has a red LED indicator that will be lighted anytime the bilge pump is running.

⚠ CAUTION

The bilge pump will be damaged if it is run continuously when no water is in the bilge.

Turning the house battery OFF-ON switch to the **OFF** position at the end of your mission will cut power to all of the helm station switch panel circuits **except the bilge pump system**.

See **Wire Color Chart** in this section for wire colors.

Downloaded from www.Manualslib.com manuals search engine

Accessory Fuse Block

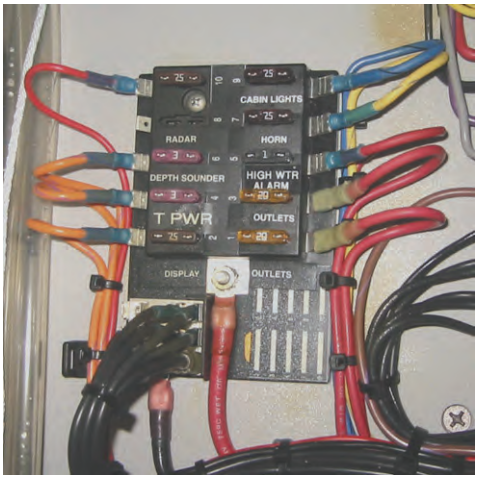

The accessory fuse block is a ten-position, blade-fuse design. It is located inside the control console. A typical fuse block could include the following branch circuits:

- 12 VDC outlet
- Whelen power supply
- Trim tab control box
- Console lights
- Courtesy lights
- Several spares

The accessory fuse block is convenient when installing or servicing accessory components that are located in or on the control console.

See **Wire Color Chart** in this section for wire colors.

T-top Fuse Block

The T-top electronics fuse block is a ten-position, blade-fuse design. It is located inside the T-top radio box.

The T-top electronics fuse block is convenient when installing or servicing radios and electronics mounted in or on the T-top.

See **Wire Color Chart** in this section for wire colors.

Electronics Distribution Panel

The electronics distribution panel (optional) has eight switchable circuit breakers controlled by one main 50-amp switchable breaker. It is located inside the control console.

The electronics distribution panel is convenient when installing or servicing sensitive navigation equipment such as chart plotters and radar units.

See **Wire Color Chart** in this section for wire colors.

Downloaded from www.Manualslib.com manuals search engine

Wire Color Chart

Black	Ground
Black/brown	Ground, pumps
Black/orange	Ground, accessories
Black/green	Ground, water level sender
Black/blue	Ground, lighting
Black/gray	Ground, navigation lights
Black/white	Ground, blower
Black/white	Ground, parallel solenoid
Black/white	Generator stop
Black/yellow	Engine stop
Green	Bonding system
Green/yellow	AC grounding
Brown	Bilge pumps, manual
Brown/red	Bilge pumps, automatic
Brown/orange	Fuel transfer pumps
Brown/white	Macerator pumps
Brown/yellow	Baitwell pumps
Brown/green	Raw water pumps
Brown/blue	Fresh water pumps
Brown/purple	Washdown pumps
Red	Battery, unprotected
Red/purple	Battery, protected
Purple	Engine, switched 12 volts
Pink	Sender, fuel level
Yellow	Bilge blower
Yellow/red	Engine start
Yellow/gray	Horn
Orange	Accessories, general
Orange/red	Wiper, port
Orange/green	Wiper, starboard
Orange/white	Wiper, center
Orange/purple	Navigation equipment
Orange/blue	Communication equipment
Orange/brown	Electric head
Orange/black	Audio system
Orange/yellow	Diesel preheat

Gray	Navigation lights
Gray/white	Anchor light
Gray/black	Masthead light
Gray/red	Remote spotlight
Gray/green	Strobe light
Gray/blue	Flood lights
Gray/orange	Docking lights
Gray/purple	Windless
Blue	Gauge back lighting
Blue/orange	Engine room lights
Blue/yellow	Remote lighting
Blue/black	Dome light, T-top
Blue/black	Dome light, console
Blue/red	Boarding lights
Blue/red	Courtesy lights
Blue/purple	Deck lights
White	CO monitor
	BCGP 2013

Downloaded from www.Manualslib.com manuals search engine

Specifications

Length, overall	19 ft.	5,8 m
Trailered length, engine tilted	27 ft. 6 in.	8,4 m
Trailered height - Note 1	8 ft.	244 cm
Trailered height - Note 2	10 ft. 5 in.	318 cm
Beam	8 ft.	244 cm
Boat weight - Note 3	1900 lbs.	862 kg
Draft, engine tilted	12 in.	31 cm
Bridge clearance, floating - Note 1	60 in.	152 cm
Bridge clearance, floating - Note 2	89 in.	226 cm
Engine shaft length, single	25 in.	64 cm
Load capacity (people, gear, engine)	2500 lbs.	1134 kg
Maximum engine power	150 HP	112 kW
Maximum engine weight	530 lbs.	240 kg
Minimum engine power	90 HP	67 kW
Fuel tank capacity - Note 4	54 gallons	204 liters
Fuel, minimum octane rating	87 AKI	90 RON

Note 1 - With standard console, no T-top
Note 2 - With standard T-top, no options
Note 3 - Base boat, excluding engine and options
Note 4 - Calculated under CFR Title 40

19 GDA 13

Downloaded from www.Manualslib.com manuals search engine

Hull Identification Number

The Hull Identification Number (HIN) is located on the starboard outboard side of the transom. This is the most important form of boat identification and it must be included in all correspondence related to your boat.

The engine and electronics model and serial numbers are also important when obtaining parts or service for these items. Record all significant numbers for HIN, keys, engines, capital equipment, and electronics on the pages provided at the end of this section. **Keep a copy of that record somewhere safe on shore.**

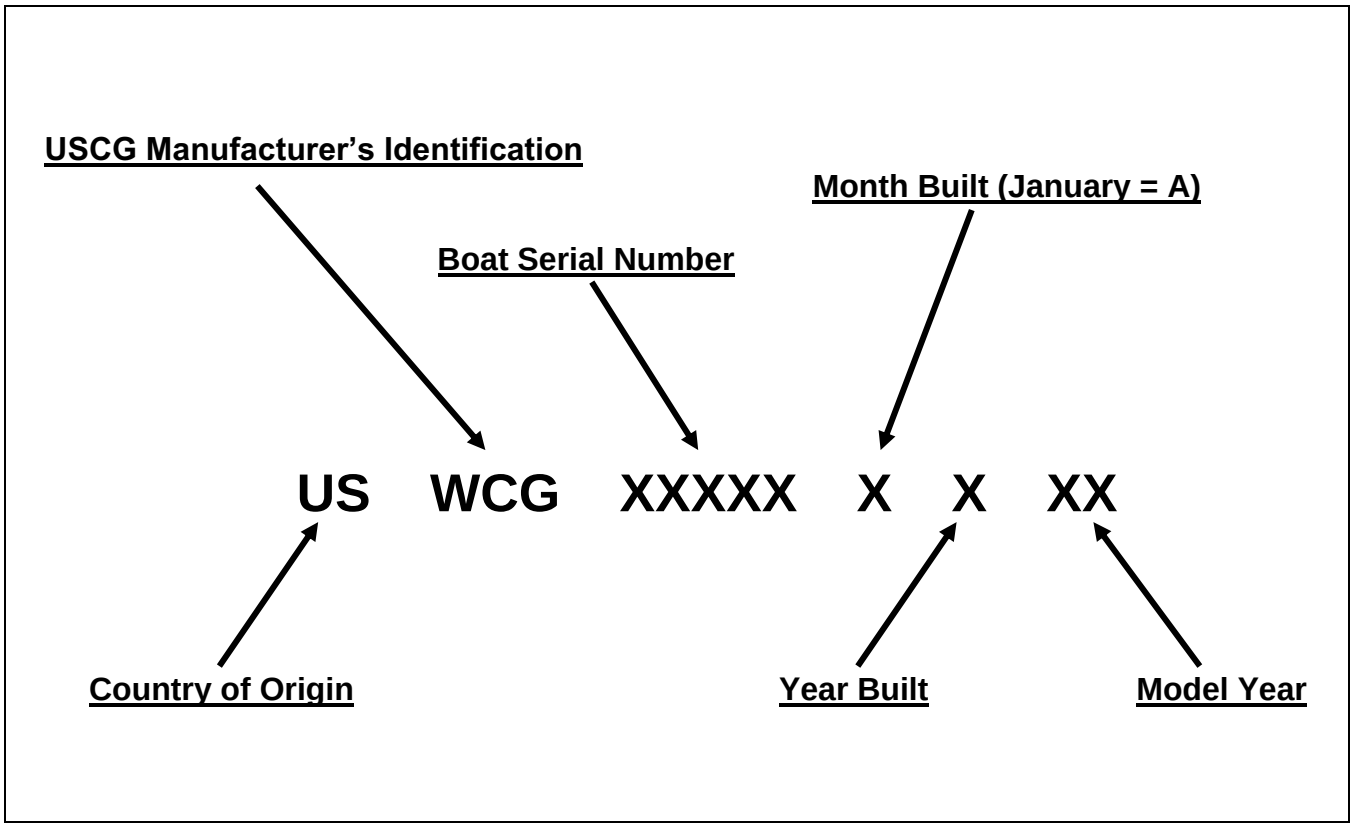

Downloaded from www.Manualslib.com manuals search engine

Options

Brunswick Commercial & Government Products (BCGP) designs, engineers, and manufactures each boat for your specific mission. We add extra Phenolic plate, aluminum plate, and fiberglass material during the molding process to reinforce attachment points for the various options. For this reason, many options **cannot** be added after the boat leaves the factory. If you want to add options or accessories to the boat, you must contact Brunswick Commercial & Government Products Customer Service Department at 386-423-2900, for advice.

⚠ WARNING

Installing certain options and accessories on the hull and deck can lead to structural failure or boat instability. Improper installations can cause property damage and serious injury. Improper installations might void portions of your hull warranty.

Hull Maintenance

Regularly scheduled maintenance will help keep your boat mission-ready and help protect it from deterioration caused by its working environment. Your experience with your particular working environment will help determine the appropriate time intervals between significant system inspections.

Washing

Exterior and interior laminated fiberglass parts and all metal parts should be washed frequently using fresh water, a mild soap, and clean cloths or a sponge. **DO NOT** use abrasive cleaners, abrasive pads, steel or bronze wool, or alkaline cleaners to clean your boat. After washing, rinse thoroughly with fresh water. Dry the boat to prevent water spots from forming on the hull and powder-coated hardware.

Downloaded from www.Manualslib.com manuals search engine

Waxing

⚠ WARNING

Gelcoat surfaces are always slippery when wet. Use extreme caution when walking on wet surfaces to avoid slipping or falling. Never wax portions of the boat that have a non-skid pattern.

The interior and exterior fiberglass parts of the hull should be waxed a minimum of twice per year to protect the gelcoat from salt, dirt, and ultraviolet degradation. Use a wax that is formulated for fiberglass and gelcoat surfaces. **DO NOT** wax the boat in direct sunlight. The gelcoat could “haze” over if waxed in direct sunlight or extreme heat. **DO NOT** wax the non-skid surfaces on the decks.

Compounding

It might be necessary to compound the hull and interior fiberglass components to remove stains, light scratches, and hazed film on the gelcoat. Compounding should only be done after the boat has been thoroughly cleaned to remove all dirt and oil. Use a fine grade compound formulated for gelcoat and fiberglass parts. Follow the manufacturer’s instructions carefully. After compounding, re-wax all surfaces following the above steps.

Gelcoat and Fiberglass Repair

The interior and exterior of your hull might sustain damage that cannot be compounded or waxed out. Typical damage would be cracks, gouges, holes, and chips. They can be caused from dropping heavy items inside your boat, or hard impacts with other things such as docks, other boats, and submerged objects. If you strike an underwater object while underway, the boat should be hauled and thoroughly inspected for damage.

Downloaded from www.Manualslib.com manuals search engine

Fiberglass repairs should only be done by an experienced fiberglass repair facility. If the damage penetrates the hull, call Brunswick Commercial & Government Products Customer Service Department for the correct repair procedures. The repair must be done following Boston Whaler's recommendations. Improper repairs can lead to hull failure and might void portions of your commercial warranty.

Trim Care

All trim on your boat must be regularly maintained to extend its life and service. Most items can be cleaned with a mild soap and a soft cloth or sponge.

Aluminum

Wash aluminum parts with clear water and mild detergent. Protect surface with liquid cleaner or wax. **DO NOT** use harsh chemicals or abrasives. To minimize corrosion from contact between dissimilar metals, use a high quality marine grade caulking compound when mounting non-aluminum hardware. Also ensure all electrical equipment is insulated from the aluminum hardware.

Deck Hardware

Clean deck hardware frequently with a mild soap and water. A glass cleaner is usually safe for stainless hardware. Remove rust spots as soon as possible with a brass, silver, or chrome cleaner. Never use an abrasive like sandpaper or steel wool on stainless steel parts.

Downloaded from www.Manualslib.com manuals search engine

Cutwater and Chafe Plates

Your boat might be equipped with an optional stainless steel cutwater. This is a plate that protects the keel against debris while underway and possible damage while beaching. Inspect the cutwater several times a year for loose screws, missing screws, and large gaps along the outside edges. If you service or replace any screws, you must use the correct screws and bed them with black 3M® 5200 sealant.

⚠ CAUTION

The cutwater retaining screws are very special. They do not penetrate through the hull. DO NOT drill out the holes or substitute any other screws. Incorrect service procedures could cause serious hull damage and might void portions of your hull warranty.

Your boat might be equipped with stainless steel transom corner chafe plates. The same precautions apply to these items. All chafe plates are powder-coated to give them a longer service life, but sometimes the powder-coat might be worn or chipped away. If the powder-coat gets chipped away, touch up the part with a high quality, acrylic enamel.

Drains and Scuppers

Check all compartment drains, scuppers, and bilge discharge fittings at least once a month. Inspect for gaps in sealant, tightness, cracks, and UV damage. Inspect scupper flaps for deterioration. If any drains or thru-hull fittings are damaged, have them serviced or replaced immediately.

⚠ CAUTION

Failure to properly maintain thru-hull fittings might lead to serious hull damage and could void portions of your hull warranty.

Downloaded from www.Manualslib.com manuals search engine

Storage and Trailers

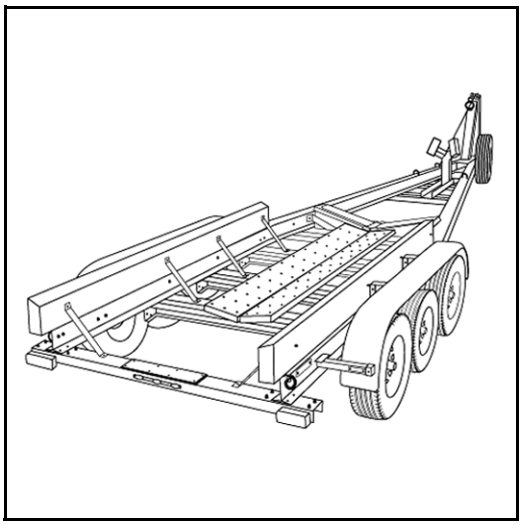

Store your boat out of the water when you are not using it to avoid the short-term effects of marine growth and the long-term effects of hydrolysis. Hydrolysis is the process where moisture can be absorbed by gelcoat and fiberglass over a long period of exposure.

Choose your trailer, boatlift, or storage cradle carefully. Be sure they incorporate a continuous bunk design that supports the boat well. Refer to **Trailer Setup** in this section for the correct dimensions if you are buying or replacing your trailer.

Review these guidelines when evaluating a trailer for your boat:

- The trailer's net carrying capacity must exceed the weight of the boat in its fully-loaded condition
- Construction materials must suit your operating environment
- The trailer should have torsion axles
- Trailer bunks must be continuous and as long as the boat's running surface
- Trailer bunk contact angle must match the hull deadrise angle
- Trailer bunks must be parallel with the boat centerline and must not touch any lifting strake
- Trailer bunks must not be segmented or swivel
- Trailer must not be an "all-roller" design
- Trailer must not support boat weight at any single, concentrated point such as a keel roller

Heavy-duty trailers and storage cradles supplied by BCGP meet all these requirements and are approved for use with Boston Whaler and Impact boats.

⚠ CAUTION

Storing your boat on a sub-standard trailer or boatlift can cause serious, permanent damage to the hull. This type of hull damage is considered "improper storage" and is not covered under the BCGP limited commercial warranty.

Downloaded from www.Manualslib.com manuals search engine

Trailer Setup

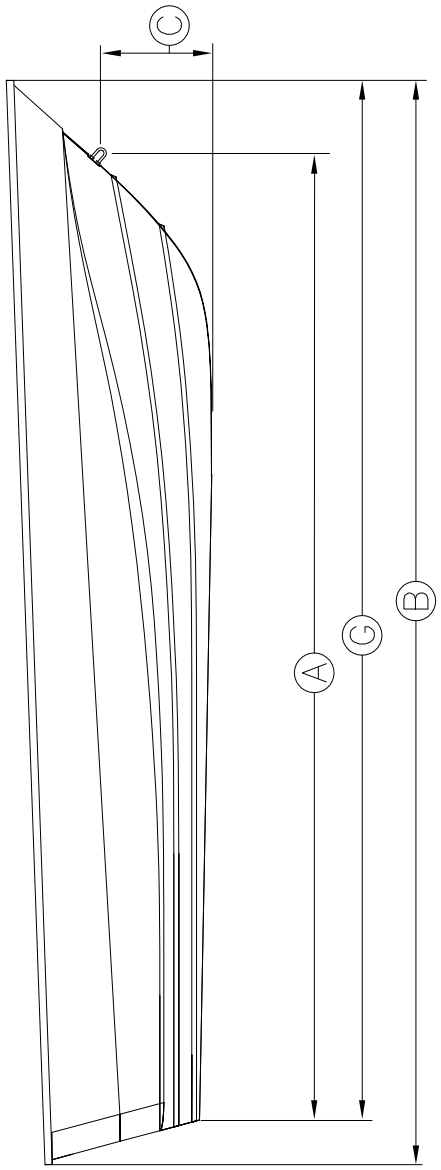

A	C/L OF BOW EYE TO TRANSOM/KEEL INTERSECTION	202”
B	LENGTH OVERALL	226 1/2”
C	VERTICAL DISTANCE, C/L OF BOW EYE TO KEEL	23 1/2”
D	CHINE BEAM	85 3/4”
E	MAXIMUM BEAM	94”
F	VERTICAL DISTANCE, INNER CHINE TO KEEL	8”
G	BOW TO TRANSOM/KEEL INTERSECTION	217 1/4”
H	VERTICAL DISTANCE, OUTER CHINE TO KEEL	7 1/4”
J	PRIMARY RUNNING STRAKES BEAM	29”
K	SECONDARY RUNNING STRAKES BEAM	55”
L	DEADRIDE OUTSIDE OF SECOND RUNNING STRAKE	16 DEG

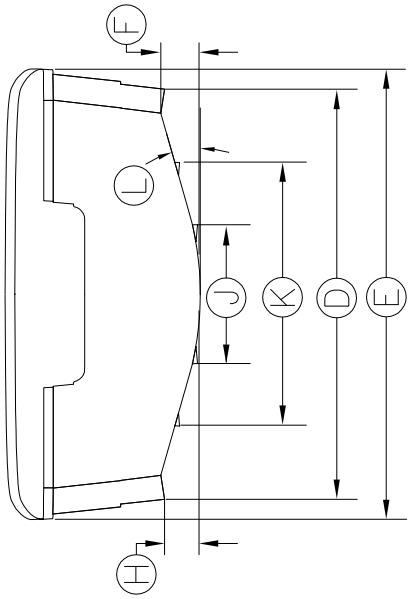

Downloaded from www.Manualslib.com manuals search engine

Fuel System

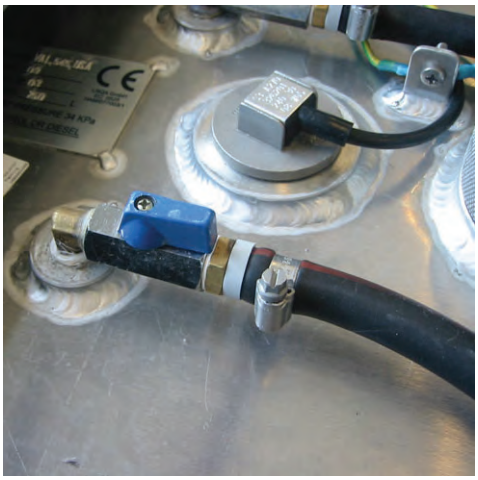

Your boat is equipped with one below-deck aluminum fuel tank that requires little maintenance. You should visually inspect the fuel tank and all associated hoses and fittings for leaks or deterioration before each mission. If you suspect a leak, you should have your boat serviced immediately by an experienced marine technician.

⚠WARNING

Do not allow any liquid gasoline to enter the boat or accumulate in the bilge. Liquid gasoline is a fire and explosion hazard. Gasoline vapor is extremely flammable and highly explosive under certain conditions.

Your boat might be equipped with one Racor® 320R-RAC-01 gasoline fuel filter. This filter features a water-separating 10-micron filter element, a replaceable spin-on canister, and a clear bowl to help detect water in your fuel.

Your inspection and servicing routine is directly related to the quality and quantity of gasoline that you take onboard. You should check the sight bowl for evidence of moisture before and after every mission.

Replace the filter element on this schedule, whichever happens first:

- Every 100 operating hours
- Annually
- Noticeable engine performance loss

⚠WARNING

Follow the manufacturer's recommendations exactly when servicing this gasoline filter to avoid engine damage or fuel leaks. Refer to the manufacturer's instruction booklet in your owner's bag for detailed information about these service procedures.

Downloaded from www.Manualslib.com manuals search engine

Steering System

Your boat is equipped with a manual hydraulic steering system.

⚠ WARNING

Follow the steering system manufacturer's maintenance recommendations exactly. Improper maintenance might cause loss of steering, which could cause property damage or serious injury.

Be sure to check the operation of the steering system before each mission. Turn the steering wheel from hard port to hard starboard while watching for any unusual engine movement and listening for any unusual noise. If any unusual movement or noise is detected, have the steering system serviced before operating the boat.

Weekly, check the steering fluid level in the helm reservoir. It should be maintained at no less than ½ inch and no more than ⅛ inch below the bottom of the filler cap threads. **Be careful not to overfill the reservoir.**

Downloaded from www.Manualslib.com manuals search engine

Every six months, a qualified marine technician should check the following items:

- Check fluid level in the helm reservoir.
- Check outboard engine tilt tube for salt deposits or signs of corrosion. Clean and grease as required.
- Check and grease slider assembly on front of the engine steering cylinder assembly.
- Check mechanical linkage and connections.
- Tighten loose parts and replace any worn items.
- Check all self-locking fasteners and locking tabs for tightness.
- Check system for hydraulic fluid leaks. Refill and purge system as necessary.
- Check steering hoses for signs of chafing, cuts, and leaks. Replace any steering hose that shows signs of damage.
- Inspect the bilge, console interior, and splashwell for signs of leaking hydraulic fluid.

Approved Steering Fluids

The following fluids are approved for use in this manual hydraulic steering system:

- Sea Star HA-5430
- Texaco H015
- Aero Shell #41
- Esso Univis N15 or J13
- Chevron Aviation fluid A
- Mobil Aero HFA
- Any MIL SPEC H-5606-C fluid

Dexron II automatic transmission fluid may be used in an emergency.

⚠ WARNING

Never use brake fluid in your manual hydraulic steering system. Brake fluid will damage the system and can cause loss of steering control.

Downloaded from www.Manualslib.com manuals search engine

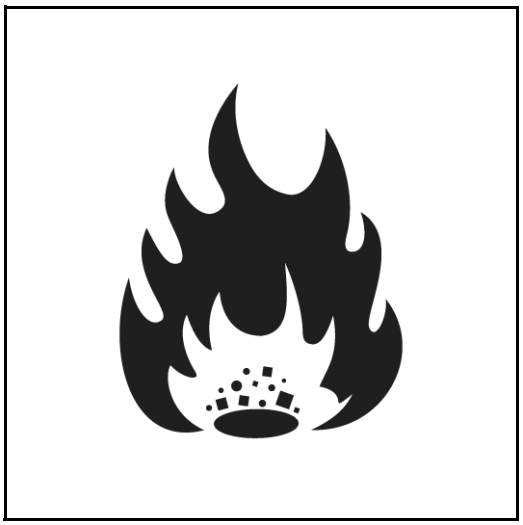

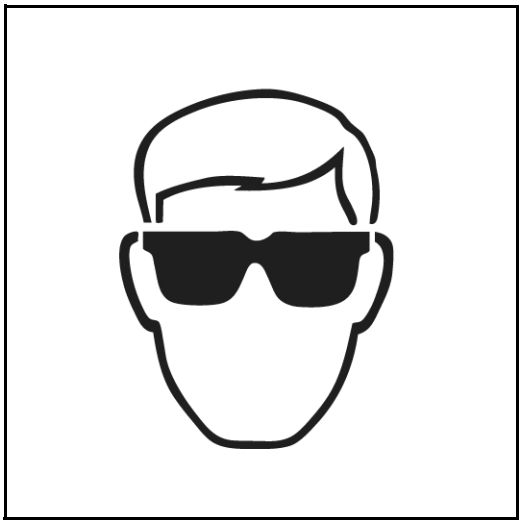

Batteries

Safety Warnings

⚠ CAUTION

Batteries should always be enclosed in the covered battery boxes provided with your boat. The boxes will contain any spilled acid and will protect the battery terminals from damage or shorting due to contact with metal objects. The battery boxes should always be secured using the heavy-duty straps and aluminum trays provided. The boxes, heavy-duty straps, and aluminum trays are designed to hold the batteries in place while the boat is underway, reducing the possibility of damage to the batteries and other equipment in the storage area.

⚠ DANGER

Never use an open flame in the battery storage area. Avoid striking sparks near the batteries. A battery can explode if a flame or spark ignites the free hydrogen gas vented during charging. Always disconnect the batteries before doing any work on the 12 VDC electrical systems.

⚠ WARNING

Always wear eye protection when servicing batteries. Batteries contain sulfuric acid, which can cause serious injury. Avoid contact with skin, eyes, and clothing. If contact occurs, immediately flush the affected area with water and call for medical assistance.

Downloaded from www.Manualslib.com manuals search engine

Capacities

Exide® marine heavy-duty 12-volt batteries are normally selected for your boat. One Group 24 1000 marine cranking amp (MCA) battery is provided for engine starting and one Group 27 115 amp hour, deep cycle battery is normally provided for the boat's electrical accessories. These batteries are considered wet-cell and require periodic maintenance.

Your boat might be equipped with Optima® Blue Top marine batteries. Optima batteries use spiral cell technology to improve vibration resistance and service life. These batteries are classified as non-spillable and do not require periodic checks of electrolyte levels.

With proper care, these marine heavy-duty batteries will last several years.

Maintenance

Only use elastic lock nuts with flat washers or standard hex nuts with split lock washers and flat washers to secure cables to the battery terminals. **DO NOT** use wing nuts to secure cables to the battery terminals.

Periodic battery maintenance is important to assure that the boat will be ready for operation when needed. Battery maintenance should include:

- Inspect the batteries and charging systems before each mission for loose connections and damaged wiring.
- Check and maintain the electrolyte level in all wet-cell batteries. **Add distilled water only, as necessary**.
- Coat the terminals and cable connections with heavy grease to reduce corrosion.
- Keep the batteries dry and clean.

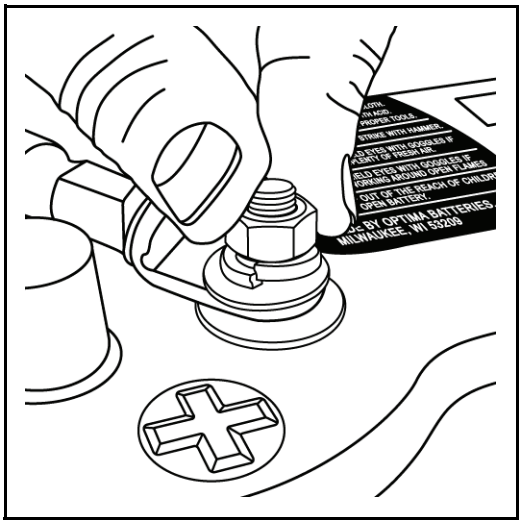

Downloaded from www.Manualslib.com manuals search engine

Remove the batteries from the boat during cold weather or off-season storage. Always protect the batteries from freezing temperatures.

You must not allow your batteries to become completely discharged. As a battery discharges, the active material on both positive and negative plates changes to lead sulfate, causing the plates to become similar in chemical composition. The battery electrolyte becomes weaker and the voltage drops. As the battery remains discharged, this process continues until recharging the battery becomes impossible.

If the battery does become discharged, be sure to recharge it as soon as possible. Overcharging a battery can also reduce its effective life.

Cleaning

⚠ WARNING

Always wear eye protection when servicing batteries. Batteries contain sulfuric acid, which can cause serious injury. Avoid contact with skin, eyes, and clothing. If contact occurs, immediately flush the affected area with water and call for medical assistance.

At least once a year, or when they appear to have dirt or corrosion on the terminals, the batteries should be cleaned. To clean the batteries, turn the battery OFF-ON switches to the OFF position. Disconnect the battery cables from the terminals. **Remove the negative (black) cable first.** Remove the battery from the plastic battery box. Clean the terminals and casing with a solution of baking soda and water. Use a soft wire brush on the terminals. Do not allow the cleaning solution to enter the battery cells. Wipe the battery and terminals dry with a clean cloth. Clean the battery cable ends in the same manner. Connect the cables to the appropriate terminals and coat the cable connections with heavy grease. **Connect the positive (red) cable first.**

Downloaded from www.Manualslib.com manuals search engine

Bilge Pump

The bilge pump and water level switch are sealed units and do not require any periodic maintenance. Check the bilge regularly to make sure there is no debris or sludge that could foul the water level switch or clog the pump.

⚠ CAUTION

Test your bilge pump and float switch before each mission. Manually activate the float switch when the rocker switch is in the AUTO position and verify pump operation. Clear away any debris that might restrict the pump or float switch.

Periodically check the condition of the pump by turning the pump on manually. You should see it pump water out the through-hull fitting if there is water in the bilge, or hear the pump motor running.

Trim Tabs

Periodically check the condition of the trim tab actuators. The actuators are completely sealed and require no maintenance. However, marine growth should be removed from the actuator shafts by pressure washing.

Cold temperatures do not affect the trim tab system. No winterization procedure is necessary.

In saltwater, to control galvanic corrosion, a zinc anode should be attached to the **top** of each trim tab. The anode must be in clean, direct contact with the stainless steel trim plane. Do not ground the trim tabs to other underwater metal objects.

Erosion of the anode material is a natural result of its protective responsibility. **Replace the anodes when they have eroded to one-half their original size.**

Refer to the Lenco operator's manual for detailed information about system operation and maintenance.

Downloaded from www.Manualslib.com manuals search engine

Off-Season Storage

All boat and engine systems must be carefully prepared for long periods of non-use. This preparation is particularly important in regions where you experience extreme changes in temperature or where the temperature is consistently below freezing.

Outboard

You must protect your outboard engine from freeze damage and from internal corrosion caused by extreme changes in temperature. Store your outboard in the vertical, operating position to avoid trapping water in the cooling system passageways. Trapped water can freeze and cause extensive damage.

Internal engine parts can be damaged by corrosion due to lack of proper storage lubrication. Your outboard engine operator's manual has a detailed procedure for adding extra internal lubrication just before the engines are stored.

Follow all the storage and winterization recommendations in your outboard operator's manual.

Batteries

Remove the batteries from the boat during cold weather or off-season storage. Always protect the batteries from freezing temperatures.

You must not allow your batteries to become completely discharged. As a battery discharges, the active material on both positive and negative plates changes to lead sulfate, causing the plates to become similar in chemical composition. The battery electrolyte becomes weaker and the voltage drops. As the battery remains discharged, this process continues until recharging the battery becomes impossible.

Leave the batteries in their plastic boxes. Store the batteries in a cool, dry location. Check the battery condition monthly during storage to avoid serious damage.

Make sure the batteries are fully charged before you reinstall them.

Downloaded from www.Manualslib.com manuals search engine

Fuel System

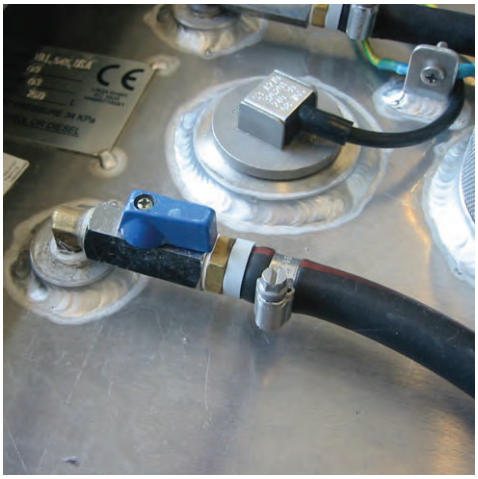

You must take appropriate steps to protect your boat's fuel system and engine during extended periods of non-use. Situations where fuel isn't being consumed, and exposure to extreme changes in temperature, will cause condensation to accumulate in your fuel system. This moisture can compromise your fuel, your fuel system, and your engine.

Use a high-quality fuel stabilizer formulated for gasoline containing ethanol when you perform these steps. Review the storage information contained in your engine operator's manual.

Follow these suggestions to minimize the possibility of damage to your fuel system and your engine during storage:

- If possible, use fuel that does not contain ethanol on a regular basis, or just before storing your boat
- Store your boat with the fuel tank **full** to avoid exposing the fuel to moisture in the atmosphere
- Refer to **Fueling Procedures** in Section 3 of this manual for fueling information
- Add a high-quality fuel stabilizer to the fuel following the additive manufacturer's recommendations
- Run your engine at idle for at least ten minutes to pump stabilized fuel through the engine's fuel system
- If possible, store your boat where it will not be exposed to extreme changes in temperature

Refer to **Blended Fuels** in Section 3 of this manual for more information about moisture and gasoline.

Downloaded from www.Manualslib.com manuals search engine

Hull Drainage

Make sure that all of the drain plugs are removed, seacocks open, and that there is no debris plugging any of the drains.

Store the boat with the bow higher than the stern to promote adequate drainage.

Secure the main hull drain plug to the steering wheel to alert personnel that the boat is in storage configuration.

Raw Water Washdown System

Your boat might be equipped with a raw water washdown system. You must protect the washdown system from the effects of freezing temperatures.

Use the following steps to prepare this system for off-season storage:

- Remove the cap from the hose outlet fitting
- Verify that the inlet seacock is in the **OPEN** position
- Run the washdown pump for approximately ten seconds or until the water stops flowing
- Verify that the raw water strainer is not holding any water
- Leave the inlet seacock in the **OPEN** position and the hose outlet cap off during storage

Downloaded from www.Manualslib.com manuals search engine

Operator Notes

Downloaded from www.Manualslib.com manuals search engine

Operator Notes

Downloaded from www.Manualslib.com manuals search engine

Boston Whaler® Products
Limited Commercial Warranty

Brunswick Commercial & Government Products (**BCGP**) warrants that each Boston Whaler hull manufactured by **BCGP** will be free from structural defects due to substandard material or workmanship, under conditions of reasonable commercial or government service, for a period of ten years from the date of manufacture. The following stipulations apply to this warranty:

- The hull warranty is offered on a pro-rata basis. Available reimbursement will be reduced each month by a percentage, which will be the number of months from date of manufacture divided by 120. As an example, if the repair occurs 72 months after date of manufacture (72 ÷ 120 = 0.6), 60% of the pro-rata warranty has expired. **BCGP** will pay 40% of the authorized warranty repair or replacement cost.
- All warranty repairs must be authorized in advance by **BCGP**. Any structural defects will be repaired at a service agent chosen by **BCGP** or at the **BCGP** repair facility in Edgewater, Florida.
- Expenses for towing, hauling out, transportation to and from the **BCGP** service agent, or to and from the **BCGP** repair facility in Edgewater, Florida are the responsibility of the boat owner.
- Damage resulting from abuse, misuse, accidents, improper storage, sub-freezing temperatures, lack of reasonable and proper maintenance, overloading or overpowering, and modification or alteration of the hull is not covered.
- Damage resulting from a war, police action, or armed conflict is not covered.
- This warranty is not transferable from the original owner.
- Specifically excluded from this warranty are gelcoat issues such as fading, color shifting, chalking, blistering, cracking, crazing, and stress lines.

Accessories manufactured and installed by **BCGP** are warranted for 12 months from date of installation against defective material or workmanship. Specifically excluded from this accessory warranty are windshield breakage or leakage, engines, engine components, batteries, propellers, controls, control cables, steering systems, electronics, and any other accessory covered by a separate OEM warranty. This accessory warranty is not transferable from the original owner.

None of these warranties applies to any Boston Whaler hull, accessory, or part that has been structurally altered or subjected to unreasonable use, improper storage, lack of reasonable and proper maintenance, negligence, or accident.

The obligation of **BCGP** under this warranty is limited to the pro-rata cost to repair or replace a hull or part that has, within the warranty period, been determined by **BCGP** to be defective in material or workmanship. The decision to repair or replace a hull or part shall be solely at the election of **BCGP**. If a warranted defect is determined to exist, **BCGP** will provide written authorization for exactly what repair will be made. **No work of any kind may be performed without this written authorization**. **BCGP** makes no other express warranties, and intends no implied warranties. Implied warranties of fitness and merchantability are specifically excluded. **BCGP** also disclaims any liability for product failure or other economic loss arising from claims of negligence, defective design, manufacturing defect, failure to warn or instruct, lack of seaworthiness, and any other theory of liability not expressly covered by this warranty. If any implied warranties are found to exist, such implied warranties will be subject to the time limits in this warranty. Some states do not allow limitations on how long an implied warranty lasts, so the above limitation might not apply to you. **BCGP** will not be liable for incidental or consequential damages including, but not limited to, loss of profits, rental of substitute equipment, or other commercial loss. Some states do not allow the exclusion or limitation of incidental or consequential damages, so this limitation or exclusion might not apply to you. **BCGP** will not be liable for any warranty expressed by a third party, if such warranty is not also expressed in writing by **BCGP**.

BCGP reserves the right to improve its products through ongoing changes in design and materials without obligation to incorporate such changes on existing boats. Speed, boat weight, fuel consumption, and other boat performance characteristics are estimates and cannot be guaranteed.

To initiate a warranty claim, it is the responsibility of the boat owner to contact **BCGP** or an authorized **BCGP** service agent immediately after discovering a defect. The boat owner must supply details of the problem, hull identification number, date of purchase, and selling dealer name, if applicable. **BCGP** will be solely responsible for determining and authorizing warranty repairs.

This warranty gives you specific rights and you might have other rights that vary from state to state. Other **BCGP** products might have warranties that are different from this one.

2013

Downloaded from www.Manualslib.com manuals search engine

BRUNSWICK

COMMERCIAL & GOVERNMENT PRODUCTS

World-class support for World-class boats.

Downloaded from www.Manualslib.com manuals search engine